PUMP TECH

60 Hz

4OS-L4C-L6C-L6W-L8W-L10W-L12W Series

4″ - 6″ - 8″ - 10″ - 12″
SUBMERSIBLE MOTORS

LOWARA
a xylem brand

Cod. 191014801 Rev. C Ed.07/2017

LOWARA
a xylem brand

CONTENTS

LOWARA
a xylem brand

4" Submersible motors
4OS Series

Submersible oil filled rewindable motors.

- **High starting torque**
- **Rewindable stator**
- **Power supply cable with extractable connector**
- **Mechanical seal**
- **Screws to fix the pump are included**
- **Approvals:**
  - D.M. 174/2004

SPECIFICATIONS

- Stainless steel outer sleeve.
- Shaft extension and coupling dimensions to **NEMA** standards.
- **Class insulation**:
  155 (F).
- **Protection class:**
  IP68.
- Internal fluid suitable for contact with foodstuffs.
- Strong and durable compensating bellows.
- Axial load supported by angular bearings.
- Mechanical seal protected by sand guard.
- **Maximum immersion depth:**
  150 m.
- Suitable for both vertical / horizontal installations
- **Maximum number of starts for hour at regular intervals:**
  30 for direct start;
  20 for impedance start.
- **Maximum water temperature:**
  35°C.
  Max. temperature applies to motors working in a installation capable of delivering a flow of water around the motor jacket of at least 0,08 m/s.
- **Water pH**:
  from 4 to 8.
- **Axial thrust**:
  3000 N from 0,37 to 2,2 kW;
  6500 N from 3 to 7,5 kW.
- **Versions**:
  - Single-phase:
    from 0,37 to 2.2 kW
    220-230 V ± 6% 60 Hz
  - Three-phase:
    from 0,37 to 7,5 kW
    220-230 V, ± 6% 60 Hz
    from 0,37 to 7,5 kW
    380 V ± 6% 60 Hz

OPTIONAL FEATURES

- Different voltages and frequencies.
- Single-phase version up to1,1 kW with built-in capacitor and motor protection (2W = Two Wire).
- Upper support with customized material.

For application limits, refer to technical appendix chapter.

ACCESSORIES

- Control panels.
- Drop cables.
- Coupling flanges.
- Cooling sleeves.
- Capacitors.

4OS MOTOR SERIES
MOTOR CROSS SECTION AND TABLE OF MATERIALS

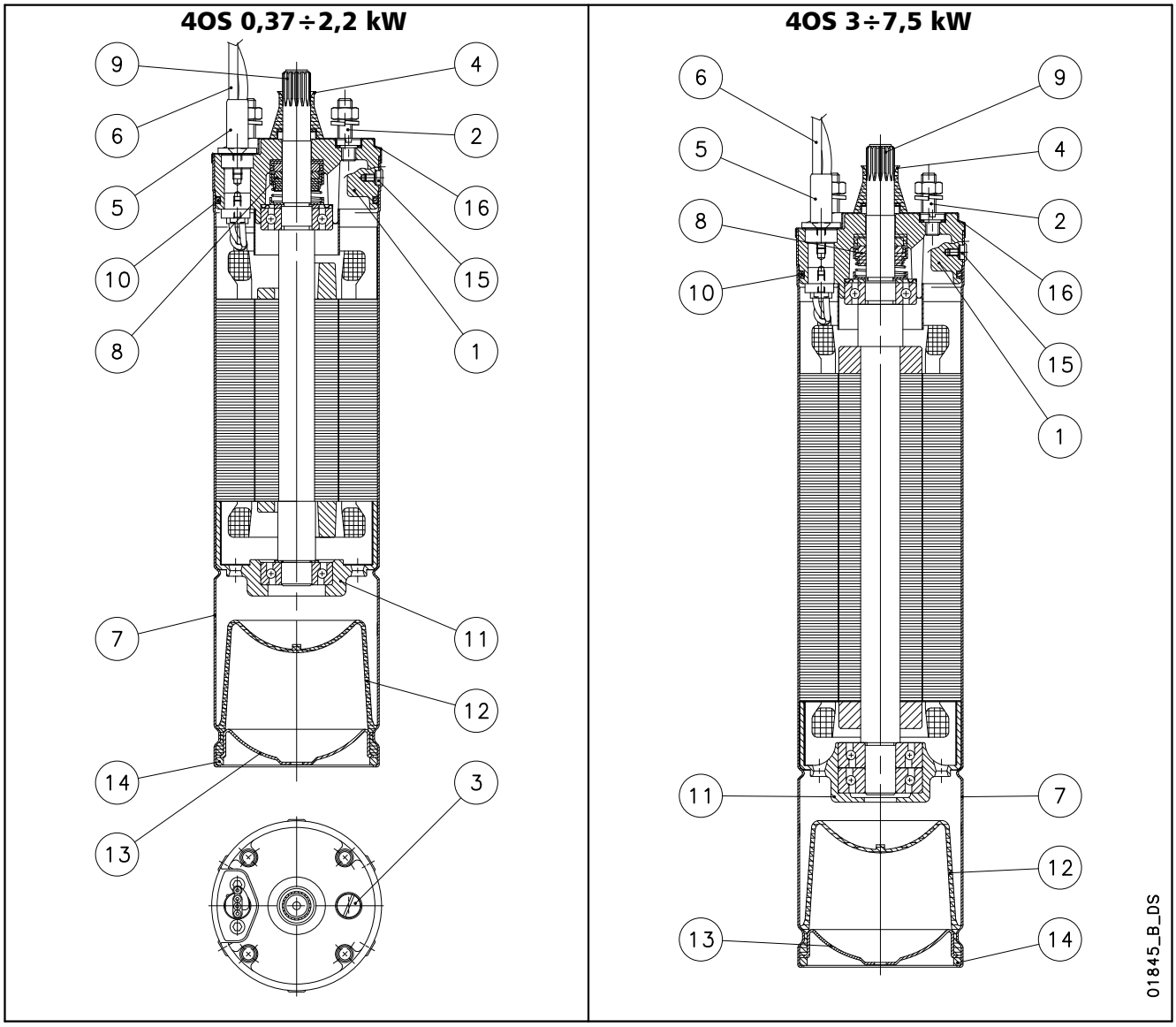

REF. N.	PART	MATERIAL	DESIGNATION EUROPE	DESIGNATION USA
1	Head	Cast iron	EN 1561-EN-GJL-200 (EN-JL1030)	ASTM A159-70-G3500
2	Studs	Stainless steel	EN 10088-3-X5CrNi18-10 (1.4301)	AISI 304
3	Filling screw	Brass	EN 12165-CuZn40Pb2 (CW617N)	
4	Sand guard	NBR		
5	Connector sleeve	Stainless steel	EN 10088-1-X5CrNi18-10 (1.4301)	AISI 304
6	Cable	EPDM		
7	Outer sleeve	Stainless steel	EN 10088-1-X5CrNi18-10 (1.4301)	AISI 304
8	Mechanical seal	Carbon / Ceramic		
9	Shaft end (up to 2.2 kW)	Stainless steel	EN 10088-3-X8CrNiS18-9 (1.4305)	AISI 303
	Shaft end (from 3 kW)	Stainless steel	EN 10088-1-X2CrNiMoN22-5-3 (1.4462)	ASTM A 182: F51
10	Elastomers	NBR		
11	Lower bracket	Cast iron	EN 1561-EN-GJL-200 (EN-JL1030)	ASTM A159-70-G3500
12	Compensating diaphragm	NBR		
13	Lower protection	Stainless steel	EN 10088-1-X5CrNi18-10 (1.4301)	AISI 304
14	Snap ring	Stainless steel	EN 10088-1-X5CrNi18-10 (1.4301)	AISI 304
15	Screws, nuts, washers	Stainless steel	EN 10088-3-X5CrNi18-10 (1.4301)	AISI 304
16	Upper cover	Stainless steel	EN 10088-1-X5CrNi18-10 (1.4301)	AISI 304
-	Cooling liquid	Non toxic oil		

4OS-2p50-en_c_tm

4OS SERIES
IDENTIFICATION CODE

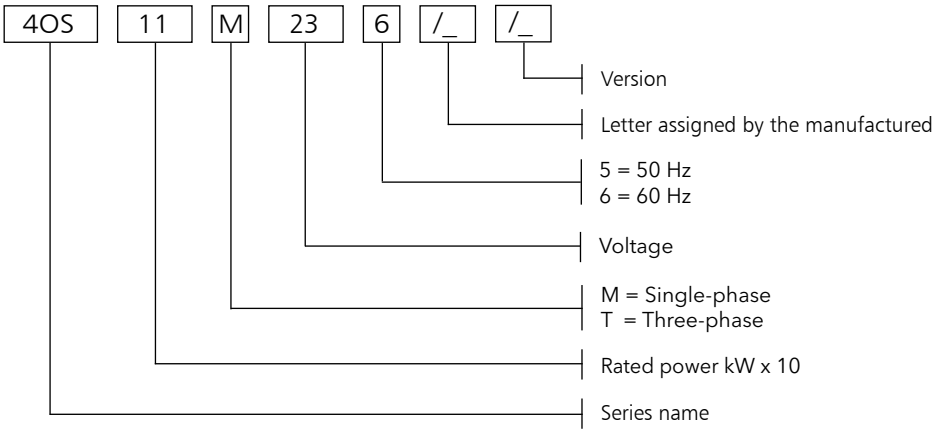

EXAMPLE: **4OS11M236**

4OS = Motor series 4OS
11 = Rated power 1,1 kW
M = Single-phase
23 = Voltage 220-240 V
6 = Frequency 60 Hz.

RATING PLATE

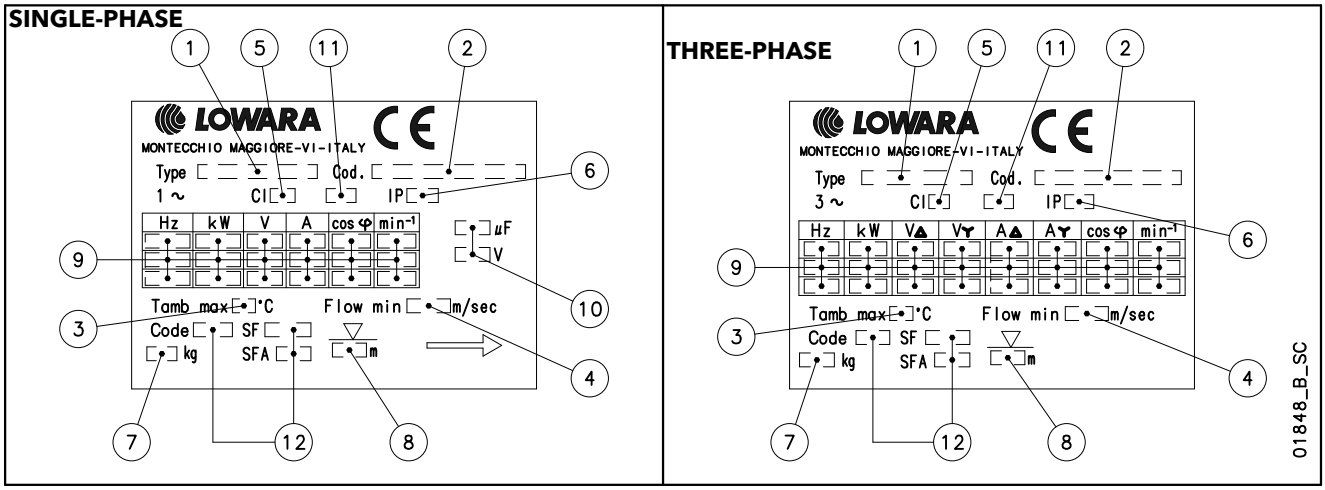

LEGEND

1 - Motor type
2 - Code
3 - Maximum water temperature
4 - Minimum water velocity
5 - Insulation class
6 - Protection class
7 - Weight
8 - Maximum immersion depht
9 - Operating characteristics
10 - Capacitor type
11 - Service type
12 - Characteristics NEMA MG1 (60Hz)

4OS MOTOR SERIES
DIMENSIONS AND WEIGHTS AT 60 Hz

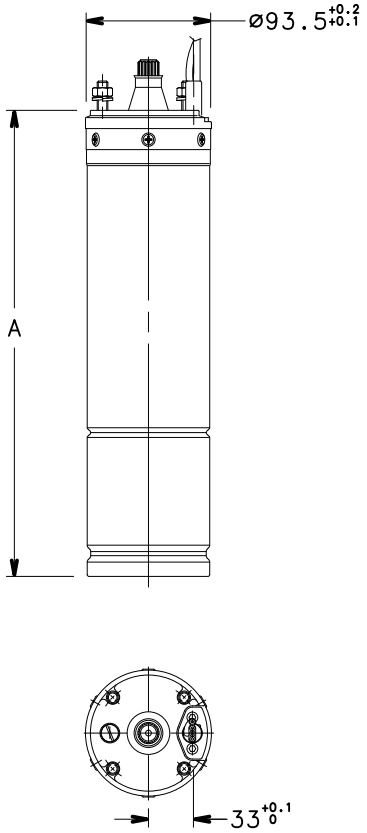

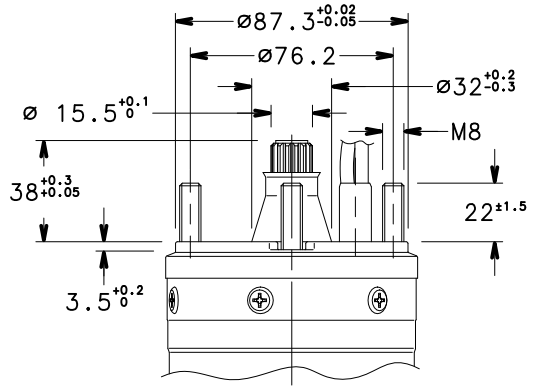

MOTOR TYPE	RATED POWER kW	RATED POWER HP	Max DIMENSIONS mm A	WEIGHT kg
4OS03M236-116	0,37	0,5	355	7,3
4OS03T236-386			334	6,8
4OS05M236-116	0,55	0,75	355	7,9
4OS05T236-386			355	7,3
4OS07M236-116	0,75	1	380	9
4OS07T236-386			355	7,9
4OS11M236-116	1,1	1,5	415	10,9
4OS11T236-386			380	9
4OS15M236	1,5	2	450	12,5
4OS15T236-386			415	11,1
4OS22M236	2,2	3	500	14,8
4OS22T236-386			450	12,6
4OS30T236-386	3	4	450	13,6
4OS40T236-386	4	5,5	570	17,5
4OS55T236-386	5,5	7,5	630	21
4OS75T236-386	7,5	10	836	28,5

4OS-2p60-en_a_td

01846_C_DD

SINGLE-PHASE OPERATING CHARACTERISTICS AT 60 Hz

MOTOR TYPE SINGLE-PHASE	RATED POWER kW	RATED POWER HP	RATED VOLTAGE V	CAPACITOR µF	CAPACITOR V	OPERATING CHARACTERISTICS AT RATED POWER A	rpm	η %	cosφ	DIRECT ON-LINE STARTING Is/In	Ts/Tn	Tmax/Tn	SERVICE FACTOR SF	SERVICE FACTOR AMPS SFA	MAX WATER TEMP. °C	CABLE TYPE N x A mm²	L m
4OS03M236	0,37	0,5	220	20	450	3,40	3495	49,7	0,99	4,00	1,23	2,98	1,6	4,50	35	4x1.5	1,75
			230			3,45	3500	47,4	0,98	4,13	1,35	3,26		4,42			
4OS05M236	0,55	0,75	220	25	450	4,66	3445	54,3	0,99	3,26	0,84	2,26	1,5	6,23	35	4x1.5	1,75
			230			4,73	3460	52,2	0,97	3,36	0,92	2,47		6,00			
4OS07M236	0,75	1	220	35	450	5,87	3460	59,8	0,97	3,85	0,74	2,47	1,4	7,41	35	4x1.5	1,75
			230			6,09	3470	56,9	0,94	3,88	0,82	2,72		7,36			
4OS11M236	1,1	1,5	220	40	450	7,61	3450	66,2	0,99	3,64	0,79	2,27	1,3	9,34	35	4x1.5	1,75
			230			7,48	3460	64,4	0,99	3,87	0,87	2,49		9,05			
4OS15M236	1,5	2	220	50	450	10,1	3435	67,8	0,99	3,90	0,63	2,26	1,25	12,2	35	4x1.5	1,75
			230			10,1	3445	66,1	0,97	4,08	0,70	2,49		11,9			
4OS22M236	2,2	3	220	50	450	15,2	3405	70,5	0,93	3,14	0,50	1,79	1,15	17,1	35	4x1.5	2,5
			230			15,7	3420	68,2	0,90	3,18	0,55	1,97		17,1			
4OS03M116	0,37	0,5	110	80	250	6,81	3495	49,8	0,99	4,00	1,23	2,97	1,6	9,02	35	4x1.5	1,75
			115			6,91	3500	47,5	0,98	4,22	1,36	3,32		8,86			
4OS05M116	0,55	0,75	110	100	250	9,68	3480	53,4	0,98	3,63	0,63	2,72	1,5	12,3	35	4x1.5	1,75
			115			10,2	3490	49,9	0,94	3,54	0,67	2,98		12,3			
4OS07M116	0,75	1	110	140	250	11,5	3480	60,7	0,98	4,05	0,56	2,94	1,4	14,5	35	4x1.5	1,75
			115			11,9	3490	57,8	0,95	4,06	0,59	3,02		14,3			
4OS11M116	1,1	1,5	110	160	250	20,1	3465	69,1	0,99	4,05	0,46	2,37	1,3	18,1	35	4x1.5	1,75
			115			14,5	3475	67,3	0,98	4,46	0,49	2,57		17,7			

Ts/Tn = ratio between starting torque and nominal torque.

Tmax/Tn = ratio between maximum torque and nominal torque.

4osm-2p60-en_b_te

LOWARA
a xylem brand

4OS MOTOR SERIES
THREE-PHASE OPERATING CHARACTERISTICS AT 60 Hz

MOTOR TYPE	RATED POWER		RATED VOLTAGE	OPERATING CHARACTERISTICS AT RATED POWER				DIRECT ON-LINE STARTING			SERVICE FACTOR	SERVICE FACTOR AMPS	MAX WATER TEMP.	CABLE TYPE	
														N x A	L
THREE-PHASE	kW	HP	V	A	rpm	η %	cosφ	Is/In	Ts/Tn	Tmax/Tn	SF	SFA	°C	mm²	m
4OS03T236	0,37	0,5	220	2,68	3485	58,5	0,62	6,40	5,71	4,73	1,6	3,17	35	4x1,5	1,75
			230	2,93	3495	56,4	0,56	6,19	6,33	5,25		3,31			
4OS05T236	0,55	0,75	220	3,26	3430	62,3	0,71	5,52	4,40	3,22	1,5	4,00	35	4x1,5	1,75
			230	3,45	3450	61,1	0,65	5,48	4,91	3,59		4,05			
4OS07T236	0,75	1	220	4,54	3450	66,3	0,66	5,58	4,23	3,27	1,4	5,21	35	4x1,5	1,75
			230	5,01	3465	63,7	0,59	5,32	4,69	3,62		5,51			
4OS11T236	1,1	1,5	220	5,66	3425	71,5	0,72	5,45	3,80	2,89	1,3	6,53	35	4x1,5	1,75
			230	6,06	3445	70,1	0,65	5,37	4,24	3,22		6,70			
4OS15T236	1,5	2	220	7,45	3430	74,4	0,71	5,73	3,64	3,01	1,25	8,40	35	4x1,5	1,75
			230	7,98	3445	72,6	0,65	5,62	4,05	3,35		8,73			
4OS22T236	2,2	3	220	10,8	3425	75,7	0,71	5,53	3,63	2,90	1,15	11,6	35	4x1,5	2,5
			230	11,9	3440	72,6	0,64	5,32	4,04	3,22		12,5			
4OS30T236	3	4	220	13,2	3455	76,3	0,79	5,41	2,44	2,79	1,15	14,5	35	4x1,5	2,5
			230	13,8	3470	75,7	0,72	5,46	2,72	3,11		14,8			
40S40T236	4	5,5	220	15,7	3435	78,9	0,85	5,85	1,81	2,70	1,15	17,7	35	4x1,5	2,5
			230	15,7	3455	78,8	0,81	6,17	2,02	3,01		17,4			
40S55T236	5,5	7,5	220	21,4	3415	78,6	0,86	5,48	1,63	2,51	1,15	24,4	35	4x2.5	2,5
			230	21,2	3440	78,5	0,83	5,81	1,82	2,79		23,8			
4OS75T236	7,5	10	220	33,5	3460	78,7	0,75	6,28	2,53	3,41	1,15	36,8	35	4x2.5	4
			230	35,4	3475	77,6	0,68	6,26	2,81	3,79		38,1			
40S03T386	0,37	0,5	380	1,55	3485	58,5	0,62	6,40	5,71	4,73	1,6	1,83	35	4x1,5	1,75
4OS05T386	0,55	0,75	380	1,88	3430	62,3	0,71	5,52	4,40	3,22	1,5	2,31	35	4x1,5	1,75
4OS07T386	0,75	1	380	2,62	3450	66,3	0,66	5,58	4,23	3,27	1,4	3,01	35	4x1,5	1,75
4OS11T386	1,1	1,5	380	3,27	3425	71,5	0,72	5,45	3,80	2,89	1,3	3,77	35	4x1,5	1,75
4OS15T386	1,5	2	380	4,30	3430	74,4	0,71	5,73	3,64	3,01	1,25	4,85	35	4x1,5	1,75
4OS22T386	2,2	3	380	6,25	3425	75,7	0,71	5,53	3,63	2,90	1,15	6,69	35	4x1,5	2,5
4OS30T386	3	4	380	7,61	3455	76,3	0,79	5,41	2,44	2,79	1,15	8,35	35	4x1,5	2,5
4OS40T386	4	5,5	380	9,05	3435	78,9	0,85	5,85	1,81	2,70	1,15	10,2	35	4x1,5	2,5
4OS55T386	5,5	7,5	380	12,3	3415	78,6	0,86	5,48	1,63	2,51	1,15	14,1	35	4x1,5	2,5
4OS75T386	7,5	10	380	19,4	3460	78,7	0,75	6,28	2,53	3,41	1,15	21,2	35	4x1,5	4

Ts/Tn = ratio between starting torque and nominal torque.

Tmax/Tn = ratio between maximum torque and nominal torque.

4ost-2p60-en_b_te

4" Submersible motors
L4C Series

Submersible water filled encapsulated motors.

- **High starting torque**
- **Power supply cable with extractable connector**
- **Mechanical seal**
- **Kingsbury type thrust bearing**
- **Screws to fix the pump are included**

SPECIFICATIONS

- Stainless steel outer sleeve.
- Shaft extension and coupling dimensions to **NEMA** standards.
- **Class insulation:** 155 (F).
- **Protection class:** IP68.
- Internal fluid suitable for contact with foodstuffs.
- Strong and durable compensating bellows.
- Axial load supported by angular bearings.
- Mechanical seal protected by sand guard.
- **Maximum immersion depth:** 300 m.
- Suitable for both vertical / horizontal installations
- **Maximum number of starts per hour at regular intervals:** 40 for direct start; 20 for impedance start.
- **Maximum water temperature**: 35°C. Max. temperrature applies to motors working in a installation capable of delivering a flow of water around the motor jacket of at least 0,3 m/s.
- **Axial thrust**: 2000 N from 0,37 to 1,1 kW; 3000 N from 1,5 to 2,2 kW; 6000 N from 3 to 7,5 kW.
- **Versions**:
  - Single-phase: from 0,37 to 3,7 kW 220-230 V ± 6% 60 Hz. from 0,37 to 0,75 kW 110-115 V ± 6% 60 Hz. (until 0,75 kW with built in automatic reset overload protection).
  - Three-phase: from 0,37 to 5,5 kW 220-230 V ± 6% 60 Hz. from 0,37 to 7,5 kW 380 V ± 6% 60 Hz.

OPTIONAL FEATURES

- Different voltages and frequencies
- Single-phase version up to 1,1 kW with built-in capacitor and motor protection (2W = Two Wire).
- Upper support with customized material.

For application limits, refer to technical appendix chapter.

ACCESSORIES

- Control panels.
- Drop cables.
- Coupling flanges.
- Cooling sleeves.
- Capacitors.

L4C MOTOR SERIES
MOTOR CROSS SECTION AND TABLE OF MATERIALS

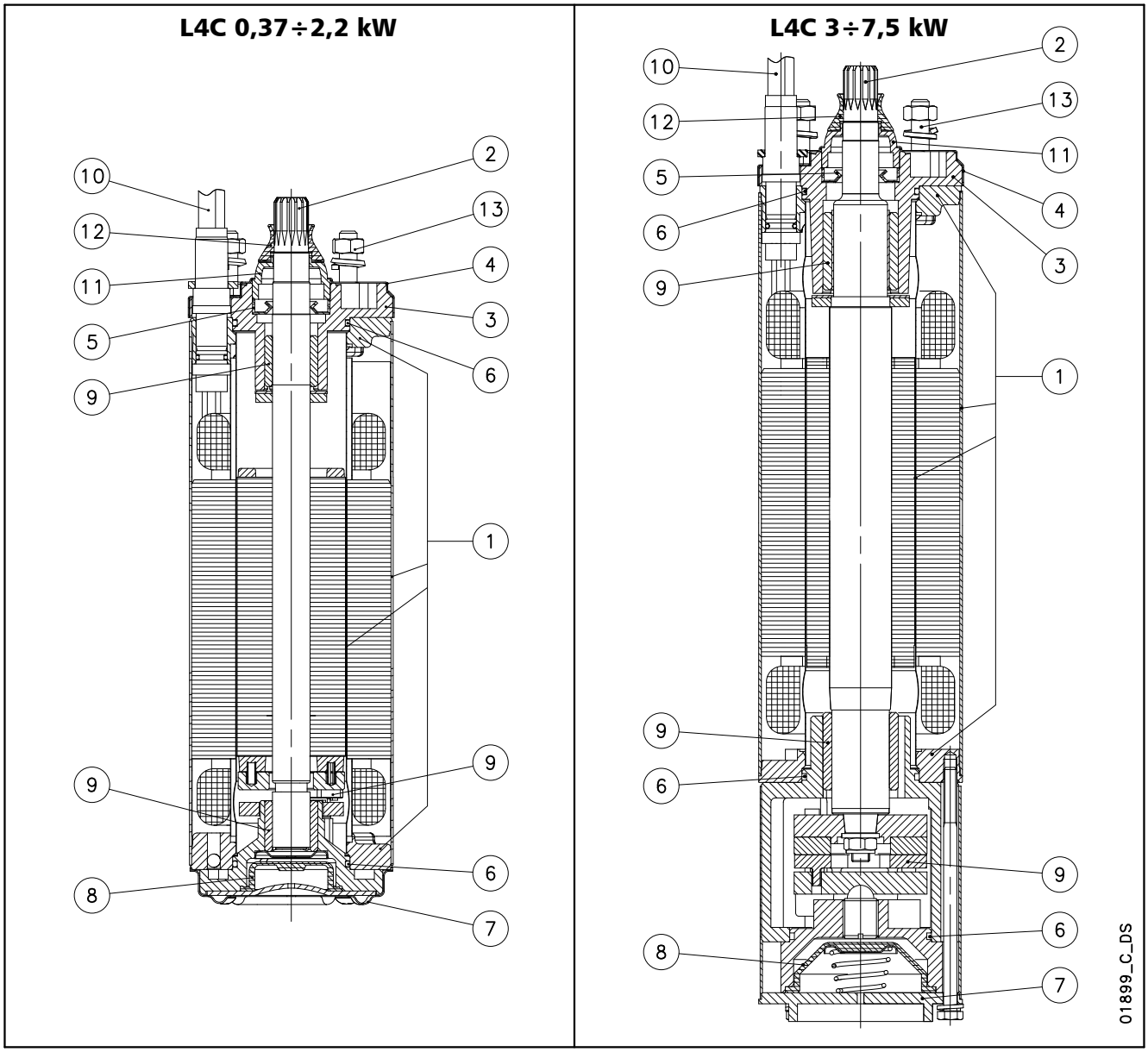

REF Nº	PART	MATERIAL	DESIGNATION EUROPE	DESIGNATION USA
1	Inner, outer sleeves and flanges	Stainless steel	EN 10088-1-X2CrNi18-9 (1.4307)	AISI 304L
2	Shaft extension (up to 2.2 kW)	Stainless steel	EN 10088-1-X5CrNi18-10 (1.4301)	AISI 304
	Shaft extension (from 3 kW)	Stainless steel	EN 10088-3-X3CrNiMoN27 (1.4460)	AISI 329
3	Upper bracket	Cast iron	EN 1561-EN-GJL-200 (EN-JL1030)	Class 25 B
4	Upper cover	Stainless steel	EN 10088-1-X5CrNi18-10 (1.4301)	AISI 304
5	Lip seal	NBR		
6	Elastomers	NBR		
7	Lower cover (up to 2.2 kW)	Stainless steel	EN 10088-1-X5CrNi18-10 (1.4301)	AISI 304
	Lower cover (from 3 kW)	Cast iron	EN 1561-EN-GJL-200 (EN-JL1030)	Class 25 B
8	Compensating bellows	EPDM		
9	Bearings	Carbon-graphite		
10	Cable	EPDM		
11	Fixed sand guard	PA6		
12	Removable sand guard	NBR		
13	Bolts and screws	Stainless steel	EN ISO 3506-1 Grade A2	
-	Cooling liquid	Demineralized water + antifreeze		

l4c-2p50-en_i_tm

L4C (TWO WIRE) MOTOR SERIES
MOTOR CROSS SECTION AND TABLE OF MATERIALS

L4C..2W 0,37÷1,1 kW

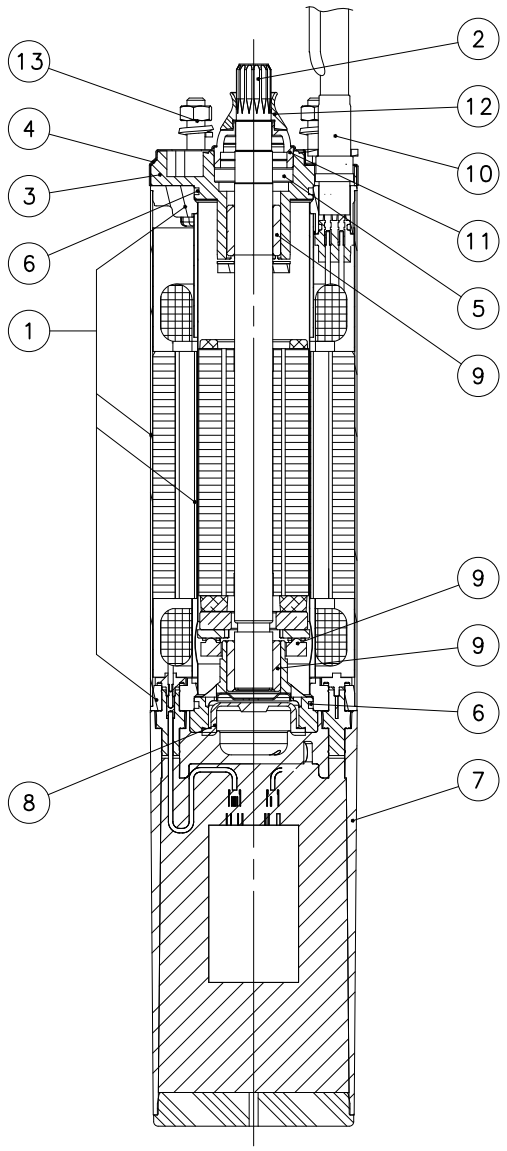

REF N°	PART	MATERIAL	DESIGNATION	
			EUROPE	USA
1	Inner, outer sleeves and flanges	Stainless steel	EN 10088-1-X2CrNi18-9 (1.4307)	AISI304L
2	Shaft extension	Stainless steel	EN 10088-1-X5CrNi18-10 (1.4301)	AISI304
3	Upper bracket	Cast iron	EN 1561-EN-GJL-200 (EN-JL1030)	Class 25 B
4	Upper cover	Stainless steel	EN 10088-1-X5CrNi18-10 (1.4301)	AISI304
5	Lip seal	NBR		
6	Elastomers	NBR		
7	Capacitor box	PPE		
8	Compensating bellows	EPDM		
9	Bearings	Carbon-graphite		
10	Cable	EPDM		
11	Fixed sand guard	PA6		
12	Removable sand guard	NBR		
13	Bolts and screws	Stainless steel	EN ISO 3506-1 Grade A2	
	Cooling liquid	Demineralized water + antifreeze		

l4c2w-2p50-en_b_tm

L4C MOTOR SERIES IDENTIFICATION CODE

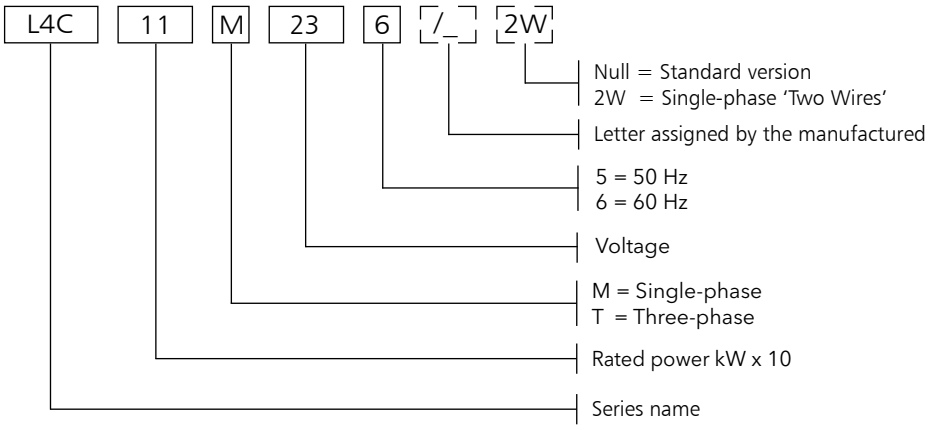

EXAMPLE: **L4C11M236**

LC4 = Motor series L4C
11 = Rated power 1,1 kW
M = Single-phase
23 = Voltage 220-240 V
6 = Frequency 60 Hz.

RATING PLATE

SINGLE-PHASE

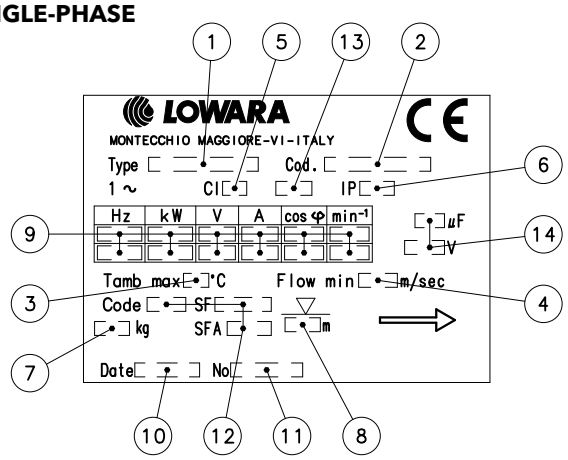

THREE-PHASE

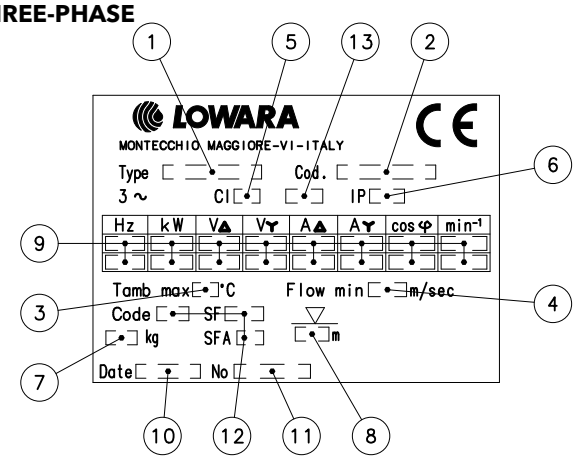

LEGEND

1 - Motor type
2 - Code
3 - Maximum water temperature
4 - Minimum water velocity
5 - Insulation class
6 - Protection class
7 - Weight
8 - Maximum immersion depht
9 - Operating characteristics
10 - Production date
11 - Serial number
12 - Characteristics NEMA MG1 (60Hz)
13 - Service type
14 - Capacitor type

L4C MOTOR SERIES
DIMENSIONS AND WEIGHTS AT 60 Hz

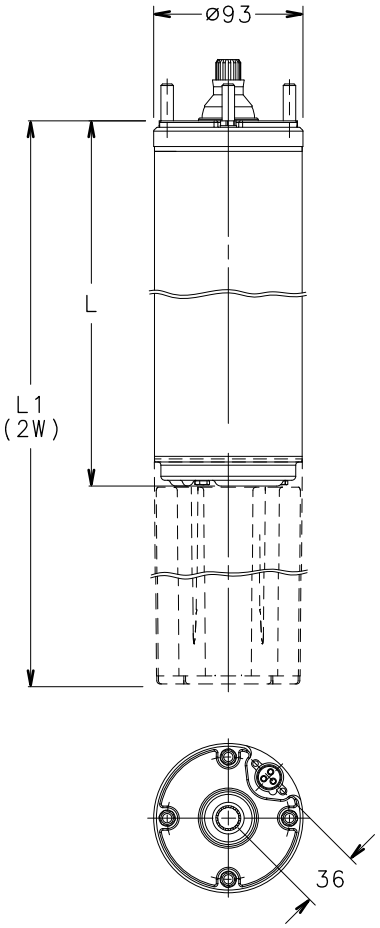

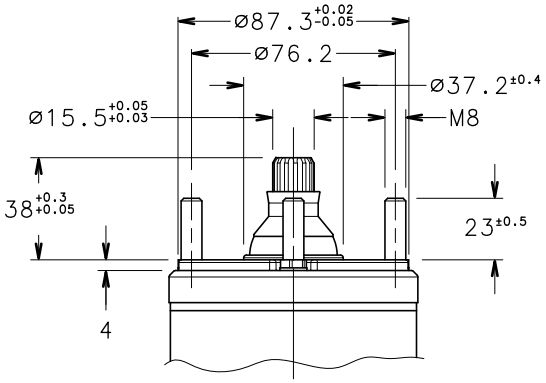

MOTOR TYPE	RATED POWER kW	RATED POWER HP	DIMENSIONS mm A	WEIGHT kg
L4C03M236-116	0,37	0,5	266	8,6
L4C03T386			236	7,9
L4C05M236-116	0,55	0,75	286	9,6
L4C05T386			266	8,7
L4C07M236-116	0,75	1	331	11,7
L4C07T386			286	9,8
L4C11M236	1,1	1,5	391	13,9
L4C11T386			346	11,7
L4C15M236	1,5	2	411	15,2
L4C15T386			391	13,9
L4C22M236	2,2	3	451	17,8
L4C22T386			411	14,8
L4C30T386	3	4	544	21
L4C40M236	4	5,5	684	27,5
L4C40T386	4	5,5	614	23,7
L4C55T386	5,5	7,5	684	26,8
L4C75T386	7,5	10	764	30,2

l4c-2p60-en_c_td

01908_B_DD

SINGLE-PHASE OPERATING CHARACTERISTICS AT 60 Hz

MOTOR TYPE	RATED POWER		SERVICE FACTOR	RATED VOLTAGE	CAPACITOR		OPERATING CHARACTERISTICS AT FULL (S.F.) POWER				DIRECT STARTING		MAX WATER TEMPERATURE	CABLE TYPE	
SINGLE-PHASE	kW	HP	S. F.	V	µF	V	A	rpm	η %	cosφ	Ts/Tn*	Is/In	°C	Nc x sec mm²	L m
L4C03M236	0,37	0,5	1,6	220	20	450	5,3	3460	55,0	0,93	0,60	4,00	35	4x1.5	1,7
				230			5,5	3480	52,0	0,89	0,65	3,87			
L4C05M236	0,55	0,75	1,5	220	25	450	7,0	3460	60,0	0,89	0,60	3,90	35	4x1.5	1,7
				230			7,4	3485	57,0	0,84	0,65	3,70			
L4C07M236	0,75	1	1,4	220	35	450	8,5	3485	59,0	0,93	0,60	5,00	35	4x1.5	1,7
				230			8,9	3500	57,0	0,89	0,65	4,80			
L4C11M236	1,1	1,5	1,3	220	40	450	12,2	3480	61,0	0,88	0,66	4,30	35	4x1.5	1,7
				230			12,7	3485	58,0	0,84	0,72	4,10			
L4C15M236	1,5	2	1,25	220	50	450	13,1	3430	65,0	0,98	0,60	4,30	35	4x1.5	1,7
				230			12,8	3455	65,0	0,97	0,65	4,60			
L4C22M236	2,2	3	1,15	220	50	450	17,6	3410	68,0	0,96	0,44	3,30	35	4x1.5	1,7
				230			17,1	3420	67,0	0,96	0,48	3,60			
L4C40M236	4	5,5	1,15	220	75	450	30,7	3440	74,0	0,93	0,32	3,80	35	4x2	2,7
				230			29,7	3460	74,0	0,92	0,34	4,10			
L4C03M116	0,37	0,5	1,6	110	80	450	10,6	3460	55,0	0,93	0,60	4,00	35	4x1.5	1,7
				115			11,0	3480	52,0	0,89	0,65	3,87			
L4C05M116	0,55	0,75	1,5	110	100	450	14,0	3460	60,0	0,89	0,60	3,90	35	4x1.5	1,7
				115			14,8	3485	57,0	0,84	0,65	3,70			
L4C07M116	0,75	1	1,4	110	140	450	17,0	3485	59,0	0,93	0,60	5,00	35	4x1.5	1,7
				115			17,8	3500	57,0	0,89	0,65	4,80			

* Ts/Tn = ratio between starting torque and nominal torque.

l4cm-2p60-en_d_te

L4C MOTOR SERIES
THREE-PHASE OPERATING CHARACTERISTICS AT 60 Hz

MOTOR TYPE	RATED POWER		SERVICE FACTOR	RATED VOLTAGE	OPERATING CHARACTERISTICS AT FULL (S.F.) POWER				DIRECT STARTING		MAX WATER TEMPERATURE	CABLE TYPE	
THREE-PHASE	kW	HP	S. F.	V	A	rpm	η %	cosφ	Ts/Tn*	Is/In	°C	Nc x sec mm²	L m
L4C03T236	0,37	0,5	1,6	220	3,5	3400	57,0	0,78	3,2	4,6	35	4x1.5	1,7
				230	3,8	3415	51,0	0,76	3,4	5,0			
L4C05T236	0,55	0,75	1,5	220	4,6	3440	58,0	0,82	3,6	5,1	35	4x1.5	1,7
				230	4,8	3450	56,0	0,77	4,0	5,4			
L4C07T236	0,75	1	1,4	220	5,3	3450	69,0	0,74	4,2	5,3	35	4x1.5	1,7
				230	5,6	3460	65,0	0,72	4,8	5,7			
L4C11T236	1,1	1,5	1,3	220	7,5	3450	68,0	0,75	4,1	6,0	35	4x1.5	1,7
				230	7,8	3465	65,0	0,72	4,5	6,6			
L4C15T236	1,5	2	1,25	220	9,4	3470	73,0	0,71	5,0	6,1	35	4x1.5	1,7
				230	9,8	3490	70,0	0,68	5,4	6,7			
L4C22T236	2,2	3	1,15	220	11,5	3450	76,0	0,77	4,8	6,6	35	4x1.5	1,7
				230	12	3470	72,0	0,75	5,2	7,1			
L4C30T236	3	4	1,15	220	16,5	3460	73,0	0,73	4,2	7,2	35	4x1,5	2,7
				230	17,3	3480	72,0	0,70	4,4	7,5			
L4C40T236	4	5,5	1,15	220	18,8	3470	82,0	0,80	4,0	6,8	35	4x2	2,7
				230	19,2	3490	78,0	0,78	4,4	7,4			
L4C55T236	5,5	7,5	1,15	220	25,4	3480	83,0	0,80	3,8	6,9	35	4x2	2,7
				230	26	3500	80,0	0,78	4,2	7,5			
L4C03T386	0,37	0,5	1,6	380	2,3	3415	51,0	0,76	3,2	5,2	35	4x1.5	1,7
L4C05T386	0,55	0,75	1,5	380	2,9	3450	56,0	0,77	3,6	5,8	35	4x1.5	1,7
L4C07T386	0,75	1	1,4	380	3,4	3460	65,0	0,72	4,2	5,8	35	4x1.5	1,7
L4C11T386	1,1	1,5	1,3	380	4,7	3465	65,0	0,72	4,1	6,6	35	4x1.5	1,7
L4C15T386	1,5	2	1,25	380	5,9	3490	70,0	0,68	5,0	6,8	35	4x1.5	1,7
L4C22T386	2,2	3	1,15	380	7,2	3470	72,0	0,75	4,8	7,1	35	4x1.5	1,7
L4C30T386	3	4	1,15	380	9,5	3460	73,0	0,73	4,2	7,2	35	4x1,5	1,7
L4C40T386	4	5,5	1,15	380	11,6	3490	78,0	0,78	4,0	7,5	35	4x1.5	2,7
L4C55T386	5,5	7,5	1,15	380	15,7	3500	80,0	0,78	3,8	7,5	35	4x1.5	2,7
L4C75T386	7,5	10	1,15	380	20	3480	81,0	0,80	3,9	7,1	35	4x2	3,5

* Ts/Tn = ratio between starting torque and nominal torque.

l4ct-2p60-en_d_te

6" Submersible motors
L6C Series

Submersible water filled encapsulated motors.

- **High starting torque**
- **Power supply cable with extractable connector**
- **Mechanical seal**
- **Kingsbury type thrust bearing**
- **Screws to fix the pump are included**

SPECIFICATIONS

- Stainless steel outer sleeve.
- Shaft extension and coupling dimensions to **NEMA** standards.
- **Class insulation:** 155 (F).
- **Protection class:** IP68.
- Internal fluid suitable for contact with foodstuffs.
- Strong and durable compensating bellows.
- Axial load supported by angular bearings.
- Mechanical seal protected by sand guard.
- **Maximum immersion depth:** 250 m.
- Suitable for both vertical / horizontal installations
- **Maximum number of starts per hour at regular intervals:** 25 for direct start.
- **Maximum water temperature:** 35°C.
  Max. temperature applies to motors working in an installation capable of delivering a flow of water around the motor jacket of at least 0,2 m/s.
- **Axial thrust**:
  16000 N from 4 to 22 kW;
  27000 N from 30 to 37 kW.
- **Version:**
  - Three-phase:
    from 4 to 22 kW
    230 V ± 6% 60 Hz
    from 4 to 37 kW
    380 V ± 6% 60 Hz
    from 4 to 37 kW
    460 V ± 6% 60 Hz

OPTIONAL FEATURES

- Silicon Carbide mechanical seal.
- Different voltages and frequencies.
- Motors with double cable outlet for star/delta start can be supplied upon request.
- Temperature sensor **PT 100 / PTC.**

For application limits, refer to technical appendix chapter.

ACCESSORIES

- Control panels.
- Drop cables.
- Coupling flanges.
- Cooling sleeves.

L6C MOTOR SERIES
MOTOR CROSS SECTION AND TABLE OF MATERIALS

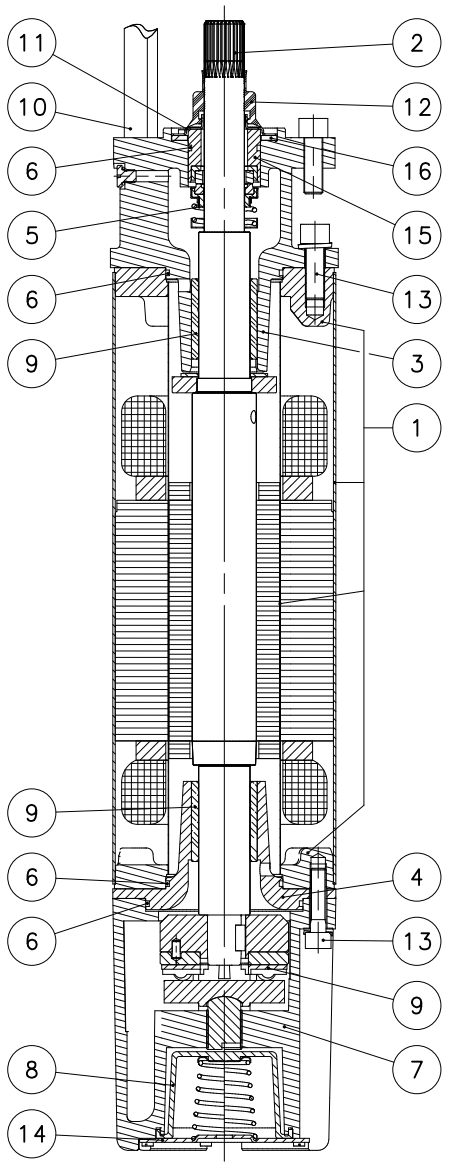

REF. N°	PART	MATERIAL	DESIGNATION	
			EUROPE	USA
1	Inner and outer sleeve	Stainless steel	EN 10088-1-X2CrNi18-9 (1.4307)	AISI 304L
	Flanges	Carbon steel	EN 10025 - S355JR (Fe 510-B)	ASTM A105
2	Shaft extension	Stainless steel duplex	EN 10095 X3CrNiMoN27-5-2 (1.4460)	AISI 329
3	Upper bracket	Cast iron	EN 1561-EN-GJL-200 (EN-JL1030)	Class 25 B
4	Intermediate bracket	Cast iron	EN 1561-EN-GJL-200 (EN-JL1030)	Class 25 B
5	Mechanical seal	Aluminium oxide / Carbon-graphite		
6	Elastomers	NBR		
7	Lower bracket	Cast iron	EN 1561-EN-GJL-200 (EN-JL1030)	Class 25 B
8	Compensating bellows	NBR		
9	Bearings	Carbon-graphite		
10	Cable	EPDM		
11	Fixed sand guard	Stainless steel	EN 10088-1-X5CrNi18-10 (1.4301)	AISI 304
12	Removable sand guard	NBR		
13	Bolts and screws	Stainless steel	EN 10088-1-X5CrNi18-10 (1.4301)	AISI 304
14	Lower cover	Stainless steel	EN 10088-1-X5CrNi18-10 (1.4301)	AISI 304
15	Mechanical seal spacer	Carb. steel (nichel-plate)	EN 10025 - S355JR (Fe 510-B)	ASTM A105
16	Sand guard gasket	CR neoprene		
-	Cooling liquid	Demineralized water + antifreeze		

l6c-2p50-en_e_tm

L6C SERIES
IDENTIFICATION CODE

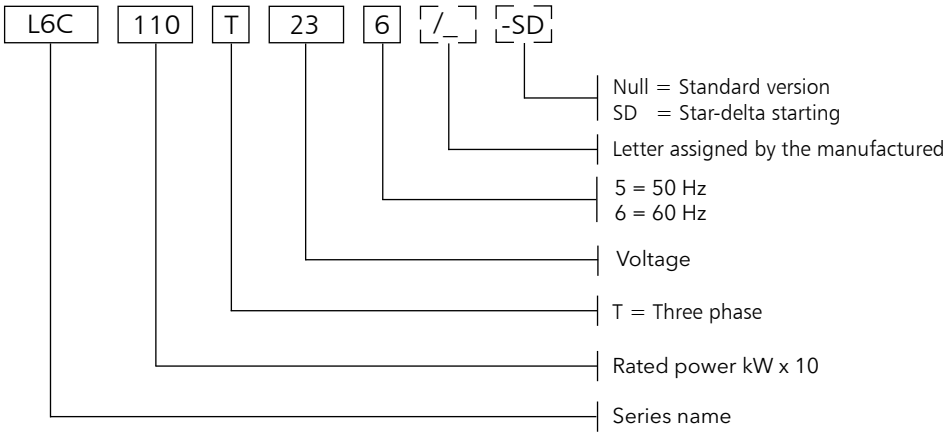

EXAMPLE: **L6C110T236**

L6C = Motor series L6C
110 = Rated power 11 kW
T = Three-phase
23 = Voltage 230 V
6 = Frequency 60 Hz.

RATING PLATE

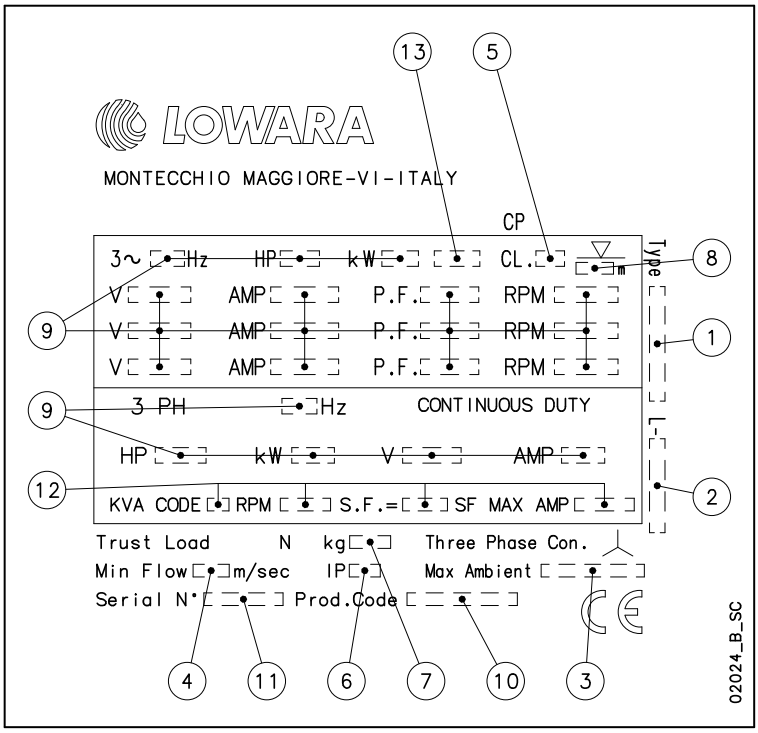

LEGEND

1 - Motor type
2 - Code
3 - Maximum water temperature
4 - Minimum water velocity
5 - Insulation class
6 - Protection class
7 - Weight
8 - Maximum immersion depht
9 - Operating characteristics
10 - Production date
11 - Serial number
12 - Characteristics at service factor
13 - Service type

L6C MOTOR SERIES
DIMENSIONS AND WEIGHTS AT 60 Hz

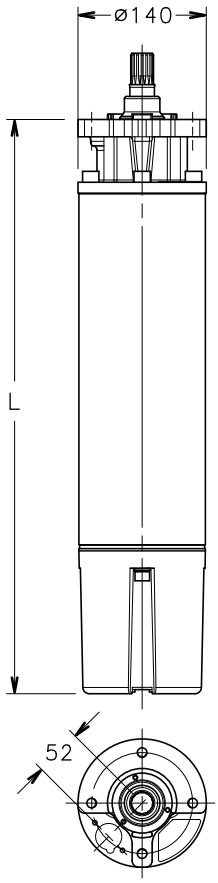

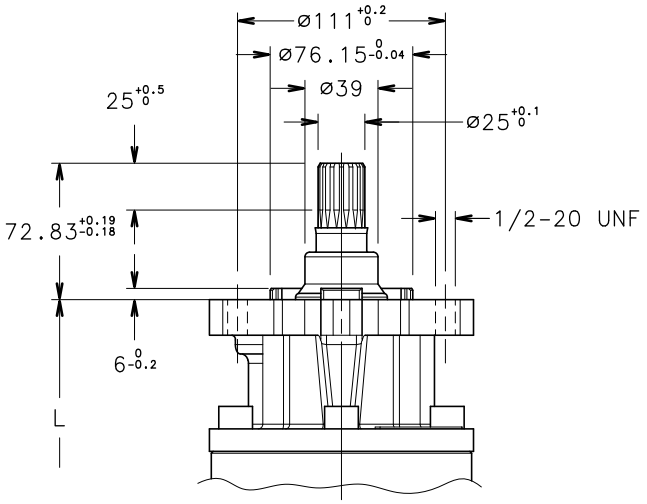

MOTOR	RATED POWER		DIMENSIONS mm	WEIGHT
TYPE	kW	HP	A	kg
L6C40T236-386-406	4	5,5	600	39,4
L6C55T236-386-406	5,5	7,5	631	43,2
L6C75T236-386-406	7,5	10	660	45,2
L6C93T236-386-406	9,3	12,5	685	48,8
L6C110T236-386-406	11	15	730	52,8
L6C150T236-386-406	15	20	785	59
L6C185T236-386-406	18,5	25	860	66,4
L6C220T236-386-406	22	30	920	72,4
L6C300T386-406	30	40	1050	85
L6C370T386-406	37	50	1180	98

l6c-2p60-en_c_td

02027_C_DD

L6C MOTOR SERIES
THREE-PHASE OPERATING CHARACTERISTICS AT 60 Hz

MOTOR TYPE	RATED POWER		SERVICE FACTOR	RATED VOLTAGE	OPERATING CHARACTERISTICS AT FULL (S.F.) POWER				DIRECT STARTING		MAX WATER TEMPERATURE	CABLE TYPE (FLAT)		
												D.O.L. 4G…	Y / D 4G… + 3x…	L
THREE-PHASE	kW	HP	S. F.	V	A	rpm	η %	cosφ	Ts/Tn*	Is/In	°C	mm²		m
L6C40T236	4	5,5	1,15	230	19,0	3470	79,0	0,80	1,7	5,45	35	4		4
L6C40T386				380	11,5	3470	79,0	0,80	1,7	5,50		4		
L6C40T406				460	9,5	3470	79,0	0,80	1,7	5,54		4		
L6C55T236	5,5	7,5	1,15	230	26,6	3450	77,0	0,80	1,8	5,00	35	4		4
L6C55T386				380	16,1	3450	77,0	0,80	1,8	5,00		4		
L6C55T406				460	13,1	3450	77,0	0,80	1,8	5,00		4		
L6C75T236	7,5	10	1,15	230	33,0	3440	80,0	0,81	2,0	5,45	35	4		4
L6C75T386				380	20,0	3440	80,0	0,81	2,0	5,50		4		
L6C75T406				460	16,5	3440	80,0	0,81	2,0	5,50		4		
L6C93T236	9,3	12,5	1,15	230	41,2	3450	82,0	0,80	2,1	4,80	35	6		4
L6C93T386				380	25,0	3450	82,0	0,80	2,1	4,80		4		
L6C93T406				460	20,6	3450	82,0	0,80	2,1	4,80		4		
L6C110T236	11	15	1,15	230	46,6	3465	85,0	0,82	2,2	5,20	35	6		4
L6C110T386				380	28,2	3465	85,0	0,82	2,2	5,20		4		
L6C110T406				460	23,3	3465	85,0	0,82	2,2	5,20		4		
L6C150T236	15	20	1,15	230	61,6	3440	85,0	0,83	2,4	5,45	35	6		4
L6C150T386				380	37,3	3440	85,0	0,83	2,4	5,45		4		
L6C150T406				460	30,8	3440	85,0	0,83	2,4	5,45		4		
L6C185T236	18,5	25	1,15	230	80,0	3440	86,0	0,80	2,5	5,70	35	8		4
L6C185T386				380	48,4	3440	86,0	0,80	2,5	5,70		6		
L6C185T406				460	40	3440	86,0	0,80	2,5	5,70		6		
L6C220T236	22	30	1,15	230	99,6	3440	86,0	0,77	2,6	5,80	35	8		4
L6C220T386				380	60,2	3440	86,0	0,77	2,6	5,80		6		
L6C220T406				460	49,8	3440	86,0	0,77	2,6	5,80		6		
L6C300T386	30	40	1,15	380	75,0	3440	85,0	0,82	2,6	6,20	35	8		4
L6C300T406				460	62,0	3440	85,0	0,82	2,6	6,20		6		
L6C370T386	37	50	1,15	380	90,0	3440	84,0	0,88	2,6	6,20	35	8		4
L6C370T406				460	77,0	3440	84,0	0,88	2,6	6,20		8		

* Ts/Tn = ratio between starting torque and nominal torque.

l6c-2p60-en_f_te

LOWARA
a xylem brand

6" Submersible motors
L6W Series

Submersible water filled rewindable motors.

- **Rewindable stator**
- **Mechanical seal**
- **Kingsbury type thrust bearing**
- **Screws to fix the pump are included**
- **Approvals:**
  - **ACS**
  - **D.M. 174/2004**

SPECIFICATIONS

- Stainless steel outer sleeve.
- Shaft extension and coupling dimensions to **NEMA** standards.
- **Class insulation:**
  70 for standard version.
  85 for HT version.
- **Protection class:**
  IP68.
- Internal fluid suitable for contact with foodstuffs.
- Strong and durable compensating bellows.
- Axial load supported by angular bearings.
- Mechanical seal protected by sand guard.
- **Maximum immersion depth:**
  350 m.
- Suitable for both vertical / horizontal installations
- **Maximum number of starts per hour at regular intervals:**
  15.
- **Maximum water temperature:**
  30°C fro standard version
  45°C for HT version
  Max. temperature applies to motors working in a installation capable of delivering a flow of water around the motor jacket as following:

  0,2 m/s for version:
  standard from 4 to 9,3 kW
  HT from 4 to 7,5 kW
  0,3 m/s for version:
  standard from 11 to 30 kW
  HT from 9,3 to 26 kW
  0,5 m/s for version:
  standrad from 37 kW
  HT from 30 kW.
- **Axial thrust**:
  16000 N from 4 to 22 kW;
  30000 N from 26 to 37 kW.
- **Version**:
  - Three-phase:
    from 4 to 18,5 kW DOL
    230 V ± 6% 60 Hz
    from 4 to 30 kW Y/D
    230 V ± 6% 60 Hz
    from 4 to 37 kW
    380 V ± 6% 60 Hz
    from 4 to 37 kW
    460 V ± 6% 0 Hz

OPTIONAL FEATURES

- Silicon Carbide mechanical seal.
- **L6WN** version made of stainless steel.
- **L6WR** version made of Duplex stainless steel.
- **HT** version for hight temperature.
- Different voltages and frequencies
- Motors with double cable outlet for star/delta start can be supplied upon request.

For application limits, refer to technical appendix chapter

ACCESSORIES

- Temperature sensor **PT 100 / PTC.**
- Control panels.
- Drop cables
- Coupling flange.
- Cooling sleeve.

L6W - L6WN - L6WR MOTOR SERIES
MOTOR CROSS SECTION

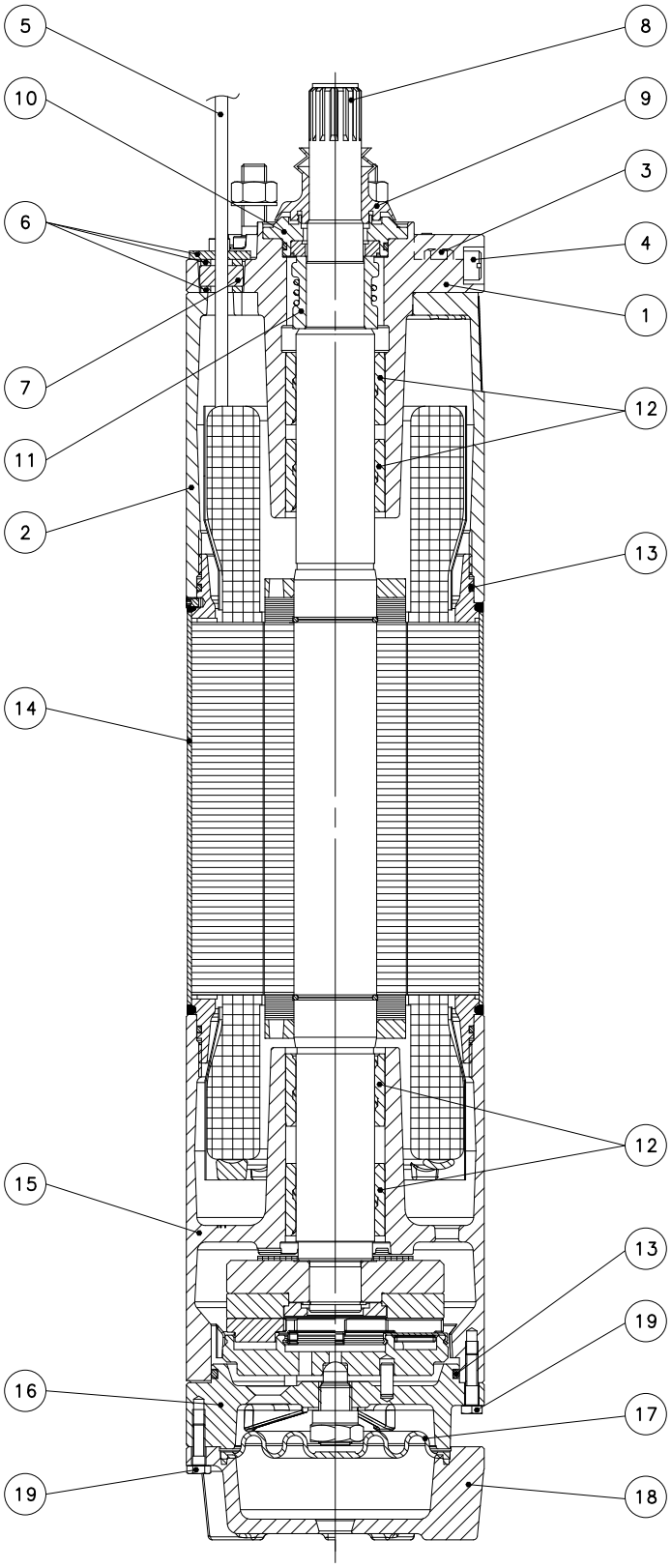

L6W TABLE OF MATERIALS

REF. Nº	PART	MATERIAL	DESIGNATION EUROPE	USA
1	Upper bracket	Cast iron	EN 1561-EN-GJL-200 (EN-JL1030)	Class 25 B
2	Spacer	Cast iron	EN 1561-EN-GJL-200 (EN-JL1030)	Class 25 B
3	Filling plug (+OR)	Stainless steel	EN 10088-1-X5CrNiMo17-12-2 (1.4401)	AISI 316
4	Vent valve	Stainless steel	EN 10088-1-X5CrNiMo17-12-2 (1.4401)	AISI 316
5	Cable	EPR		
6	Cable gland plate	Stainless steel	EN 10088-1-X5CrNi18-10 (1.4301)	AISI304
7	Cable gland	EPDM		
8	Shaft end	Stainless steel	EN 10088-1-X20Cr13 (1.4021)	AISI420
9	Removable sand guard	EPDM		
10	Mechanical seal cover	Stainless steel	EN 10213-4-GX5CrNi19-10 (1.4308)	ASTM CF-8 (AISI 304 cast)
11	Mechanical seal	Carbon-graphite / Ceramic		
12	Bush bearings	Carbon-graphite		
13	Elastomers	NBR		
14	Motor sleeve	Stainless steel	EN 10088-1-X2CrNi19-11 (1.4306)	AISI304L
15	Lower bracket	Cast iron	EN 1561-EN-GJL-200 (EN-JL1030)	Class 25 B
16	Thrust bearing bracket	Cast iron	EN 1561-EN-GJL-200 (EN-JL1030)	Class 25 B
17	Diaphragm	EPDM		
18	Lower cover	Cast iron	EN 1561-EN-GJL-200 (EN-JL1030)	Class 25 B
19	Bolts and screws	Stainless steel	EN 10088-1-X5CrNi18-10 (1.4301)	AISI304
-	Cooling liquid	Water + antifreeze		

L6w-2p50-en_c_tm

L6WN TABLE OF MATERIALS

REF. Nº	PART	MATERIAL	DESIGNATION EUROPE	USA
1	Upper bracket	Stainless steel	EN 10213-4-GX5CrNiMo19-11-2 (1.4408)	ASTM CF-8M (AISI 316 cast)
2	Spacer	Stainless steel	EN 10213-4-GX5CrNiMo19-11-2 (1.4408)	ASTM CF-8M (AISI 316 cast)
3	Filling plug (+OR)	Stainless steel (+NBR)	EN 10088-1-X5CrNiMo17-12-2 (1.4401)	AISI 316
4	Vent valve	Stainless steel	EN 10088-1-X5CrNiMo17-12-2 (1.4401)	AISI 316
5	Cable	EPR		
6	Cable gland plate	Stainless steel	EN 10088-1-X5CrNiMo17-12-2 (1.4401)	AISI 316
7	Cable seal	EPDM		
8	Shaft end	Duplex stainless steel	EN 10088-1-X2CrNiMoN22-5-3 (1.4462)	A276/A790-S31803
9	Removable sand guard	EPDM		
10	Mechanical seal cover	Stainless steel	EN 10213-4-GX5CrNiMo19-11-2 (1.4408)	ASTM CF-8M (AISI 316 cast)
11	Mechanical seal	Carbon graphite / Ceramic		
12	Bush bearings	Carbon-graphite		
13	Elastomers	NBR		
14	Motor sleeve	Stainless steel	EN 10088-1-X2CrNiMo17-12-2 (1.4404)	AISI 316L
15	Lower bracket	Stainless steel	EN 10213-4-GX5CrNiMo19-11-2 (1.4408)	ASTM CF-8M (AISI 316 cast)
16	Thrust bearing bracket	Stainless steel	EN 10213-4-GX5CrNiMo19-11-2 (1.4408)	ASTM CF-8M (AISI 316 cast)
17	Diaphragm	EPDM		
18	Lower cover	Stainless steel	EN 10213-4-GX5CrNiMo19-11-2 (1.4408)	ASTM CF-8M (AISI 316 cast)
19	Bolts and screws	Stainless steel	EN 10088-1-X5CrNiMo17-12-2 (1.4401)	AISI 316
-	Cooling liquid	Water + antifreeze		

L6wn-2p50-en_c_tm

L6WR TABLE OF MATERIALS

REF. Nº	PART	MATERIALE	DESIGNATION EUROPE	USA
1	Upper bracket	Duplex stainless steel	EN 10213-4-GX2CrNiMoCuN25-6-3-3 (1.4517)	
2	Spacer	Duplex stainless steel	EN 10213-4-GX2CrNiMoCuN25-6-3-3 (1.4517)	
3	Filling plug (+OR)	Duplex stainless steel + NBR	EN 10088-1-X2CrNiMoN22-5-3 (1.4462)	A276/A790-S31803
4	Vent valve	Duplex stainless steel	EN 10088-1-X2CrNiMoN22-5-3 (1.4462)	A276/A790-S31803
5	Cable	EPR		
6	Cable gland plate	Stainless steel	EN 10088-1X1NiCrMoCu25-20-5 (1.4539)	AISI 904L
7	Cable gland	EPDM		
8	Shaft end	Duplex stainless steel	EN 10088-1-X2CrNiMoN22-5-3 (1.4462)	A276/A790-S31803
9	Removable sand guard	EPDM		
10	Mechanical seal cover	Duplex stainless steel	EN 10088-1-X2CrNiMoN22-5-3 (1.4462)	A276/A790-S31803
11	Mechanical seal	Carbon graphite / Ceramic		
12	Bush bearings	Carbon-graphite		
13	Elastomers	NBR		
14	Motor sleeve	Stainless steel	EN 10088-1X1NiCrMoCu25-20-5 (1.4539)	AISI 904L
15	Lower bracket	Duplex stainless steel	EN 10213-4-GX2CrNiMoCuN25-6-3-3 (1.4517)	
16	Thrust bearing bracket	Duplex stainless steel	EN 10213-4-GX2CrNiMoCuN25-6-3-3 (1.4517)	
17	Diaphragm	EPDM		
18	Lower cover	Duplex stainless steel	EN 10213-4-GX2CrNiMoCuN25-6-3-3 (1.4517)	
19	Bolts and screws	Duplex stainless steel	EN 10088-1-X2CrNiMoN22-5-3 (1.4462)	A276/A790-S31803
	Cooling liquid	Water + antifreeze		

L6wr-2p50-en_c_tm

L6W MOTOR SERIES IDENTIFICATION CODE

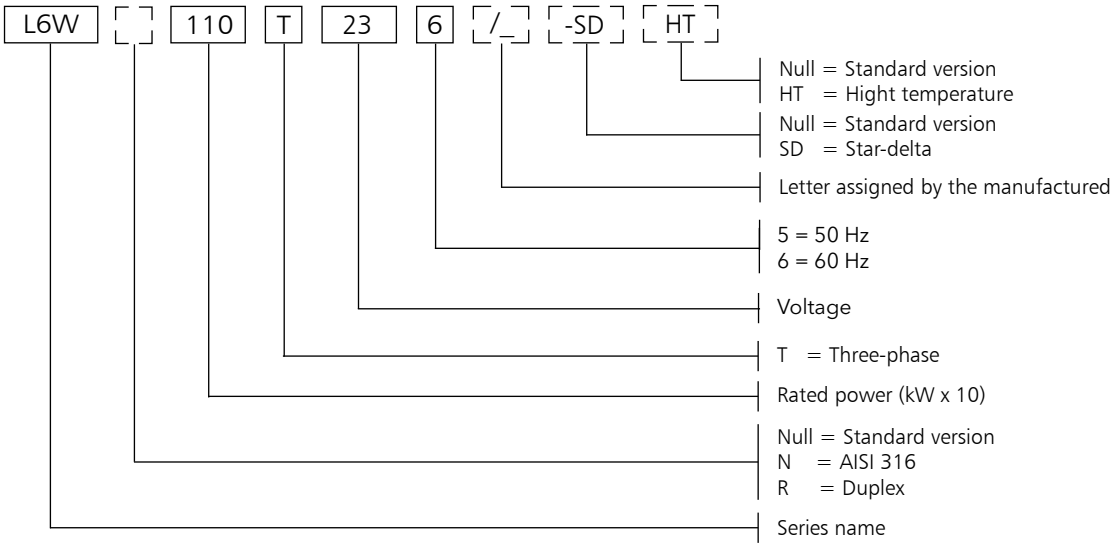

EXAMPLE: **L6W110T236/A HT**

L6W = Motor series L6W
110 = Rated power 11 kW
T = Three-phase
23 = Voltage 230 V
6 = Frequency 60 Hz.
HT = hight temperature.

RATING PLATE

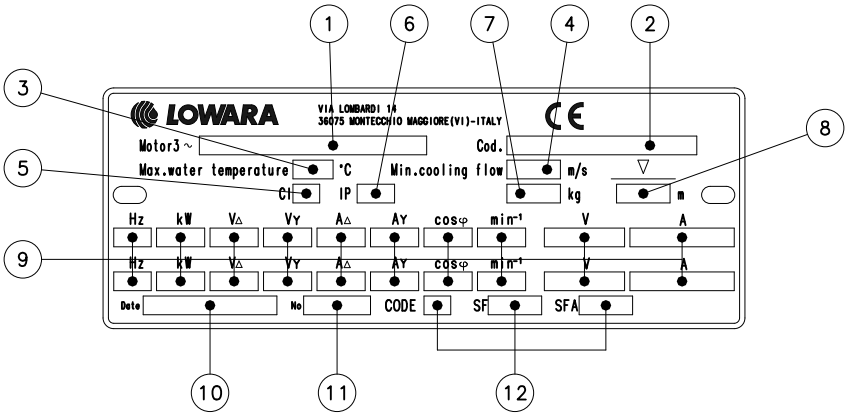

03557_A_SC

LEGEND

1 - Motor type
2 - Code
3 - Maximum water temperature
4 - Minimum water velocity
5 - Insulation class
6 - Protection class
7 - Weight
8 - Maximum immersion depht
9 - Operating characteristics
10 - Production date
11 - Serial number
12 - Characteristics at service factor

L6W MOTOR SERIES
DIMENSIONS AND WEIGHTS AT 60 Hz

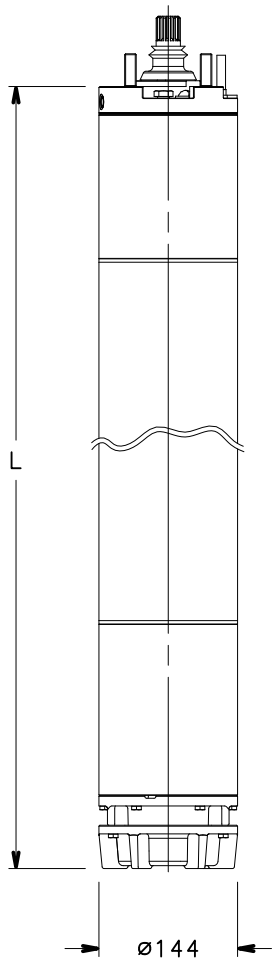

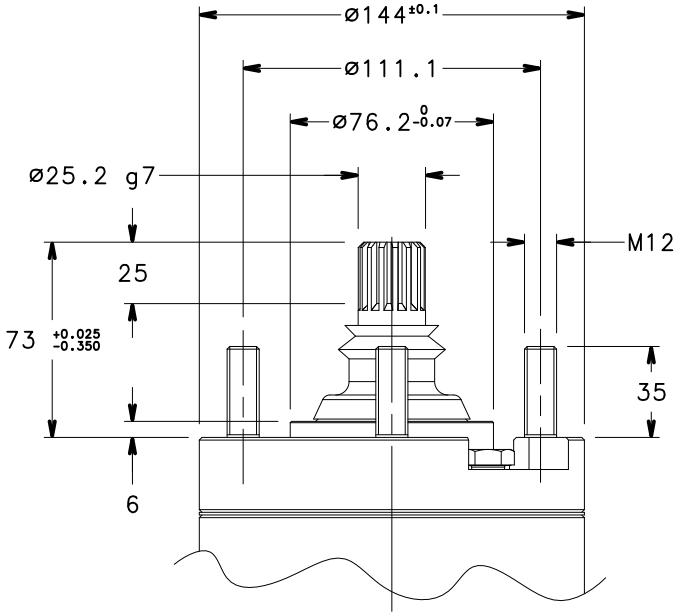

MOTOR TYPE	RATED POWER		DIMENSIONS (mm)	WEIGHT
	kW	HP	L	kg
L6W40T236-386-406	4	5,5	583	38
L6W55T236-386-406	5,5	7,5	613	42
L6W75T236-386-406	7,5	10	653	46
L6W93T236-386-406	9,3	12,5	683	50
L6W110T236-386-406	11	15	723	54
L6W130T236-386-406	13	17,5	763	58
L6W150T236-386-406	15	20	833	66
L6W185T236-386-406	18,5	25	903	74
L6W220T236-386-406	22	30	943	77
L6W260T236-386-406	26	35	1071	86
L6W300T236-386-406	30	40	1151	94
L6W370T236-386-406	37	50	1301	108

l6w-2p60_a_td

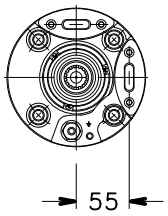

MOTOR TYPE	RATED POWER		DIMENSIONS (mm)	WEIGHT
	kW	HP	L	kg
L6W40T236-386-406 HT	4	5,5	613	42
L6W55T236-386-406 HT	5,5	7,5	653	46
L6W75T236-386-406 HT	7,5	10	683	50
L6W93T236-386-406 HT	9,3	12,5	723	54
L6W110T236-386-406 HT	11	15	763	58
L6W130T236-386-406 HT	13	17,5	833	66
L6W150T236-386-406 HT	15	20	903	74
L6W185T236-386-406 HT	18,5	25	943	77
L6W220T236-386-406 HT	22	30	1071	86
L6W260T236-386-406 HT	26	35	1151	94
L6W300T236-386-406 HT	30	40	1301	108

l6w-ht-2p60_a_td

03570_D_DD

L6W MOTOR SERIES
THREE-PHASE OPERATING CHARACTERISTICS AT 60 Hz

MOTOR TYPE THREE-PHASE	RATED POWER		RATED VOLTAGE	OPERATING CHARACTERISTICS AT RATED POWER				DIRECT ON-LINE STARTING			SERVICE FACTOR	SERVICE FACTOR AMPS	MAX WATER TEMP.	CABLE TYPE Sec. (mm^2)		
	kW	HP	V	A	rpm	η %	cosφ	Is/In	Ts/Tn	Tmax/Tn	SF	SFA	°C	DOL	Y/D	L (m)
L6W40T236	4	5,5	230	17,3	3500	72,8	0,80	4,51	1,28	2,01	1,15	19,0	30	4	4	4
L6W40T386			380	9,94	3490	73,0	0,84	4,75	1,29	2,02		11,2				
L6W40T406			460	8,09	3485	73,0	0,85	4,82	1,29	2,02		9,16				
L6W55T236	5,5	7,5	230	24,3	3505	75,4	0,75	5,01	1,59	2,54	1,15	26,4	30	4	4	4
L6W55T386			380	13,7	3495	76,3	0,80	5,38	1,60	2,55		15,1				
L6W55T406			460	10,9	3490	76,8	0,82	5,59	1,60	2,55		12,2				
L6W75T236	7,5	10	230	30,6	3500	78,2	0,79	5,33	1,69	2,49	1,15	33,6	30	4	4	4
L6W75T386			380	17,4	3490	78,8	0,83	5,67	1,70	2,50		19,4				
L6W75T406			460	14,1	3485	78,9	0,84	5,78	1,70	2,50		15,8				
L6W93T236	9,3	12,5	230	37,6	3495	79,4	0,78	5,52	1,84	2,69	1,15	41,3	30	4	4	4
L6W93T386			380	21,3	3485	79,9	0,83	5,90	1,85	2,70		23,8				
L6W93T406			460	17,3	3480	80,0	0,84	6,00	1,85	2,70		19,5				
L6W110T236	11	15	230	43,5	3490	80,3	0,79	5,38	1,52	2,56	1,15	47,9	30	6	4	4
L6W110T386			380	24,7	3480	80,7	0,84	5,73	1,53	2,57		27,8		4		
L6W110T406			460	20,2	3475	80,8	0,85	5,79	1,53	2,57		22,8				
L6W130T236	13	17,5	230	52,5	3495	80,5	0,77	5,33	1,66	2,55	1,15	57,4	30	6	4	4
L6W130T386			380	29,5	3485	81,2	0,82	5,74	1,67	2,55		32,9		4		
L6W130T406			460	23,3	3475	81,4	0,86	6,00	1,67	2,56		26,4				
L6W150T236	15	20	230	56,4	3485	83,1	0,80	6,21	1,93	3,02	1,15	62,5	30	10	4	4
L6W150T386			380	32,5	3470	83,3	0,84	6,52	1,94	3,03		36,6		4		
L6W150T406			460	27,2	3475	83,3	0,83	6,44	1,94	3,03		30,5				
L6W185T236	18,5	25	230	71,1	3495	83,4	0,78	6,24	2,39	3,10	1,15	78,2	30	10	6	4
L6W185T386			380	40,4	3485	83,8	0,83	6,65	2,40	3,11		45,1		4	4	
L6W185T406			460	32,6	3480	83,9	0,85	6,81	2,40	3,11		36,7		6		
L6W220T236	22	30	230	82,5	3510	84,8	0,79	5,70	0,98	2,95	1,15	91,9	30	-	6	4
L6W220T386			380	47,5	3500	84,7	0,83	5,99	0,98	2,96		53,8		6	4	
L6W220T406			460	40,0	3500	84,7	0,82	5,88	0,98	2,96		45,0				
L6W260T236	26	35	230	107	3510	84,4	0,72	5,45	1,17	2,81	1,15	117	30	-	10	4
L6W260T386			380	59,8	3500	85,0	0,78	5,90	1,18	2,82		66,5		6	4	
L6W260T406			460	47,8	3495	85,0	0,80	6,10	1,18	2,82		53,7				
L6W300T236	30	40	230	112	3510	84,4	0,79	6,04	2,49	2,75	1,15	126	30	-	10	4
L6W300T386			380	64,9	3500	84,4	0,83	6,31	2,49	2,75		72,6		10	4	
L6W300T406			460	53,9	3505	84,5	0,83	6,28	2,49	2,75		61,0				
L6W370T386	37	50	380	86,2	3495	83,4	0,78	5,40	1,32	2,63	1,15	95,9	30	10	6	4
L6W370T406			460	68,6	3490	83,6	0,81	5,61	1,32	2,63		77,1			4	

Ts/Tn = ratio between starting torque and nominal torque.

Tmax/Tn = ratio between maximum torque and nominal torque.

l6w-2p60_d_te

L6W HT MOTOR SERIES
THREE-PHASE OPERATING CHARACTERISTICS AT 60 Hz

MOTOR TYPE THREE-PHASE	RATED POWER		RATED VOLTAGE	OPERATING CHARACTERISTICS AT RATED POWER				DIRECT ON-LINE STARTING			SERVICE FACTOR	SERVICE FACTOR AMPS	MAX WATER TEMP.	CABLE TYPE Sec. (mm^2)		
	kW	HP	V	A	rpm	η %	cosφ	Is/In	Ts/Tn	Tmax/Tn	SF	SFA	°C	DOL	Y/D	L (m)
L6W40T236 HT	4	5,5	230	21,3	3530	72,3	0,65	5,74	2,21	3,52	1,15	22,4	45	4	4	4
L6W40T386 HT			380	11,5	3525	74,0	0,71	6,43	2,21	3,52		12,3				
L6W40T406 HT			460	9,04	3520	74,9	0,74	6,76	2,21	3,53		9,74				
L6W55T236 HT	5,5	7,5	230	26,2	3525	76,1	0,69	6,23	2,34	3,45	1,15	27,9	45	4	4	4
L6W55T386 HT			380	14,4	3520	77,6	0,75	6,86	2,34	3,45		15,5				
L6W55T406 HT			460	11,5	3520	78,0	0,77	7,10	2,34	3,45		12,5				
L6W75T236 HT	7,5	10	230	33,5	3515	78,2	0,72	6,21	2,30	3,36	1,15	36,0	45	4	4	4
L6W75T386 HT			380	18,5	3510	79,4	0,78	6,81	2,31	3,37		20,2				
L6W75T406 HT			460	14,9	3505	79,7	0,79	6,98	2,31	3,37		16,4				
L6W93T236 HT	9,3	12,5	230	39,5	3510	79,8	0,74	5,87	1,81	3,05	1,15	42,7	45	6	4	4
L6W93T386 HT			380	22,0	3500	80,8	0,80	6,38	1,82	3,06		24,2		4		
L6W93T406 HT			460	17,8	3495	81,0	0,81	6,51	1,82	3,06		19,7				
L6W110T236 HT	11	15	230	48,2	3515	79,9	0,72	5,81	1,98	3,04	1,15	51,7	45	6	4	4
L6W110T386 HT			380	26,4	3505	71,1	0,78	6,42	1,99	3,05		28,9		4		
L6W110T406 HT			460	20,5	3500	81,7	0,82	6,83	1,99	3,05		22,8				
L6W130T236 HT	13	17,5	230	56,5	3510	81,9	0,71	6,21	2,24	3,50	1,15	60,7	45	10	4	4
L6W130T386 HT			380	31,3	3500	82,9	0,76	6,78	2,25	3,51		34,1		4		
L6W130T406 HT			460	24,6	3495	83,5	0,80	7,13	2,25	3,52		27,1				
L6W150T236 HT	15	20	230	63,3	3515	82,7	0,72	7,02	2,98	3,86	1,15	68,2	45	10	4	4
L6W150T386 HT			380	35,0	3510	83,5	0,78	7,68	2,99	3,86		38,3		4		
L6W150T406 HT			460	28,0	3505	83,9	0,80	7,93	2,99	3,87		30,9		6		
L6W185T236 HT	18,5	25	230	74,1	3520	84,6	0,74	6,77	1,94	3,25	1,15	81,2	45	-	6	4
L6W185T386 HT			380	41,6	3515	85,2	0,79	7,30	1,94	3,25		46,3		6	4	
L6W185T406 HT			460	35,0	3520	85,0	0,78	7,17	1,94	3,25		38,8		6		
L6W220T236 HT	22	30	230	97,7	3525	84,0	0,67	5,97	1,40	3,35	1,15	105	45	10	10	4
L6W220T386 HT			380	53,5	3520	85,0	0,73	6,59	1,40	3,36		58,6			4	
L6W220T406 HT			460	42,3	3515	85,2	0,77	6,89	1,40	3,36		46,8		6		
L6W260T236 HT	26	35	230	102	3525	84,4	0,76	6,64	2,89	3,19	1,15	112	45	-	10	4
L6W260T386 HT			380	57,7	3515	84,7	0,81	7,10	2,89	3,19		64,8		10	4	
L6W260T406 HT			460	48,0	3520	84,7	0,80	7,05	2,89	3,19		53,7				
L6W300T386 HT	30	40	380	75,2	3520	83,7	0,73	6,19	1,64	3,28	1,15	82,1	45	-	6	4
L6W300T406 HT			460	58,8	3515	84,2	0,76	6,54	1,64	3,28		64,9		10	4	

Ts/Tn = ratio between starting torque and nominal torque.

Tmax/Tn = ratio between maximum torque and nominal torque.

l6w-ht-2p60_b_te

8" Submersible motors
L8W Series

Submersible water filled rewindable motors.

- **Rewindable stator**
- **Mechanical seal**
- **Kingsbury type thrust bearing**
- **Approvals:**
  - **ACS**
  - **D.M. 174/2004**

SPECIFICATIONS

- Stainless steel outer sleeve.
- Shaft extension and coupling dimensions to **NEMA** standards.
- **Class insulation:**
  70 for standard version.
  85 for HT version.
- **Protection class:**
  IP68.
- Internal fluid suitable for contact with foodstuffs.
- Strong and durable compensating bellows.
- Axial load supported by angular bearings.
- Mechanical seal protected by sand guard.
- **Maximum immersion depth:**
  350 m.
- Suitable for both vertical / horizontal installations
- **Maximum number of starts per hour at regular intervals:**
  10 .
- **Maximum water temperature:**
  30°C fro standard version
  45°C for HT version
  Max. temperature applies to motors working in a installation capable of delivering a flow of water around the motor jacket of at least 0,5 m/s.
- **Axial thrust**:
  50000 N from 30 to 93 kW.
- **Version**:
  Three-phase:
  from 30 to 93 kW
  380 V ± 6% 60 Hz
  from 30 to 93 kW
  460 V ± 6% 60 Hz

OPTIONAL FEATURES

- Silicon Carbide mechanical seal.
- **L8WN** version made of stainless steel.
- **L8WR** version made of Duplex stainless steel
- **HT** version for hight temperature.
- Different voltages and frequencies.
- Motors with double cable outlet for star/delta start can be supplied upon request.

For application limits, refer to technical appendix chapter.

ACCESSORIES

- Temperature sensor **PT 100 / PTC.**
- Control panels.
- Drop cables
- Coupling flange.
- Cooling sleeve.
- Screws to fix the pump.

L8W - L8WN - L8WR MOTOR SERIES
MOTOR CROSS SECTION

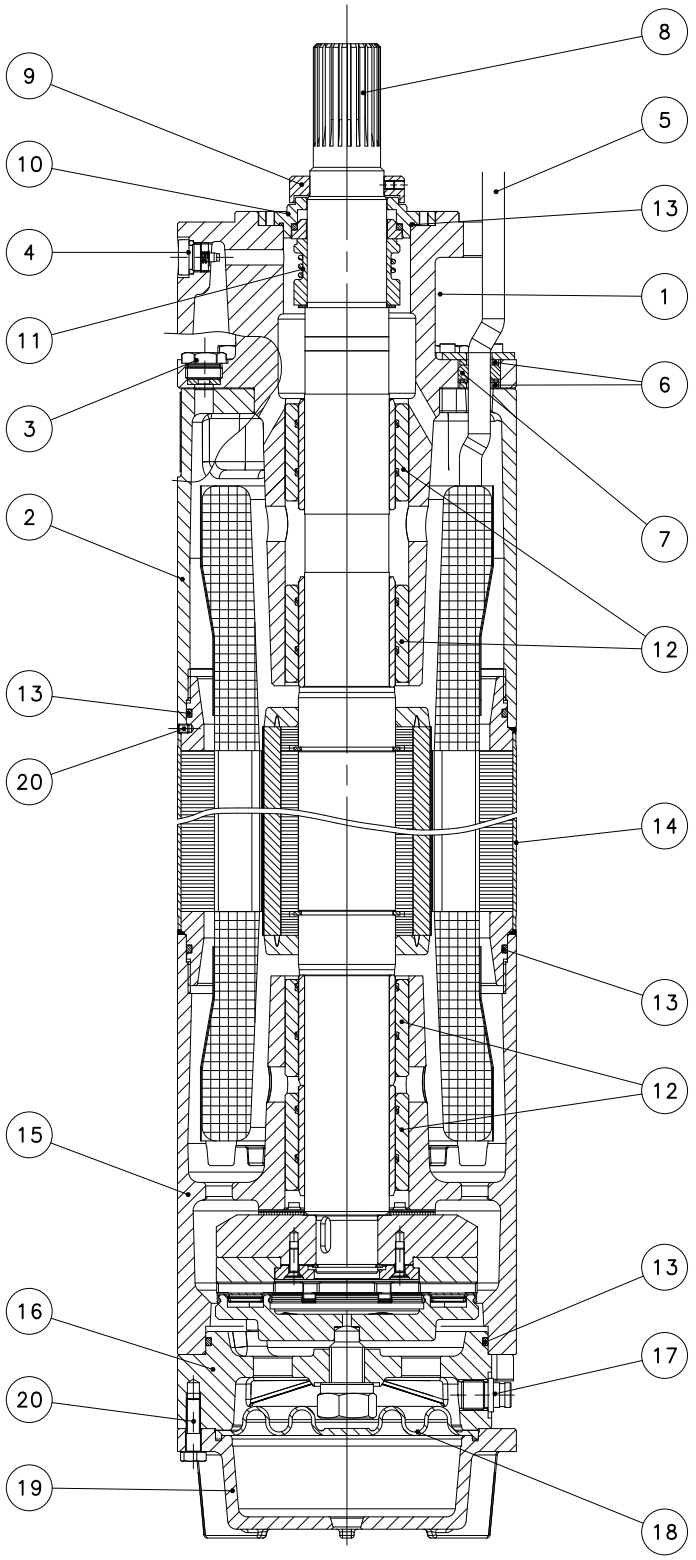

L8W TABLE OF MATERIALS

REF. N°	PART	MATERIAL	DESIGNATION EUROPE	USA
1	Upper bracket	Cast iron	EN 1561-EN-GJL-200 (EN-JL1030)	Class 25 B
2	Spacer	Cast iron	EN 1561-EN-GJL-200 (EN-JL1030)	Class 25 B
3	Filling plug (+OR)	Stainless steel (+NBR)	EN 10088-1-X5CrNiMo17-12-2 (1.4401)	AISI 316
4	Vent valve	Stainless steel	EN 10088-1-X5CrNiMo17-12-2 (1.4401)	AISI 316
5	Cable	EPR		
6	Cable gland plate	Stainless steel	EN 10088-1-X5CrNi18-10 (1.4301)	AISI 304
7	Cable gland	EPDM		
8	Shaft end	Duplex stainless steel	EN 10088-1-X2CrNiMoN22-5-3 (1.4462)	A276/A790-S31803
9	Removable sand guard	Stainless steel	EN 10088-1-X2CrNiMo17-12-2 (1.4404)	AISI 316L
10	Mechanical seal cover	Stainless steel	EN 10088-1-X2CrNiMo17-12-2 (1.4404)	AISI 316L
11	Mechanical seal	Carbon-graphite / Ceramic		
12	Bush bearings	Carbon-graphite		
13	Elastomers	NBR		
14	Motor sleeve	Stainless steel	EN 10088-1-X2CrNi19-11 (1.4306)	AISI304L
15	Lower bracket	Cast iron	EN 1561-EN-GJL-200 (EN-JL1030)	Class 25 B
16	Thrust bearing bracket	Cast iron	EN 1561-EN-GJL-200 (EN-JL1030)	Class 25 B
17	Filling valve	Stainless steel	EN 10088-1-X5CrNiMo17-12-2 (1.4401)	AISI 316
18	Diaphragm	EPDM		
19	Lower cover	Cast iron	EN 1561-EN-GJL-200 (EN-JL1030)	Class 25 B
20	Bolts and screws	Stainless steel	EN 10088-1-X5CrNi18-10 (1.4301)	AISI 304
-	Cooling liquid	Water + antifreeze		

L8-L10w-2p50-en_b_tm

L8WN TABLE OF MATERIALS

REF. N°	PART	MATERIAL	DESIGNATION EUROPE	USA
1	Upper bracket	Stainless steel	EN 10213-4 - GX5CrNiMo19-11-2 (1.4408)	ASTM CF-8M (AISI 316 cast)
2	Spacer	Stainless steel	EN 10213-4 - GX5CrNiMo19-11-2 (1.4408)	ASTM CF-8M (AISI 316 cast)
3	Filling plug (+OR)	Stainless steel	EN 10088-1-X5CrNiMo17-12-2 (1.4401)	AISI 316
4	Vent valve	Stainless steel	EN 10088-1-X5CrNiMo17-12-2 (1.4401)	AISI 316
5	Cable	EPR		
6	Cable gland plate	Stainless steel	EN 10088-1-X5CrNiMo17-12-2 (1.4401)	AISI 316
7	Cable gland	EPDM		
8	Shaft end	Duplex stainless steel	EN 10088-1-X2CrNiMoN22-5-3 (1.4462)	A276/A790-S31803
9	Removable sand guard	Stainless steel	EN 10088-1-X2CrNiMo17-12-2 (1.4404)	AISI 316L
10	Mechanical seal cover	Stainless steel	EN 10088-1-X2CrNiMo17-12-2 (1.4404)	AISI 316L
11	Mechanical seal	Carbon-graphite / Aluminium oxide		
12	Bush bearings	Carbon-graphite		
13	Elastomers	NBR		
14	Motor sleeve	Stainless steel	EN 10088-1-X2CrNiMo17-12-2 (1.4404)	AISI 316L
15	Lower bracket	Stainless steel	EN 10213-4 - GX5CrNiMo19-11-2 (1.4408)	ASTM CF-8M (AISI 316 cast)
16	Thrust bearing bracket	Stainless steel	EN 10213-4 - GX5CrNiMo19-11-2 (1.4408)	ASTM CF-8M (AISI 316 cast)
17	Filling valve	Stainless steel	EN 10088-1-X5CrNiMo17-12-2 (1.4401)	AISI 316
18	Diaphragm	EPDM		
19	Lower cover	Stainless steel	EN 10213-4 - GX5CrNiMo19-11-2 (1.4408)	ASTM CF-8M (AISI 316 cast)
20	Bolts and screws	Stainless steel	EN 10088-1-X5CrNiMo17-12-2 (1.4401)	AISI 316
-	Cooling liquid	Water + antifreeze		

L8-L10wn-2p50-en_b_tm

L8WR TABLE OF MATERIALS

REF. N°	PART	MATERIAL	DESIGNATION EUROPE	USA
1	Upper bracket	Duplex stainless steel	EN 10213-4-GX2CrNiMoCuN25-6-3-3 (1.4517)	
2	Spacer	Duplex stainless steel	EN 10213-4-GX2CrNiMoCuN25-6-3-3 (1.4517)	
3	Filling plug (+OR)	Duplex steel (+NBR)	EN 10088-1-X2CrNiMoN22-5-3 (1.4462)	A276/A790-S31803
4	Vent valve	Duplex stainless steel	EN 10088-1-X2CrNiMoN22-5-3 (1.4462)	A276/A790-S31803
5	Cable	EPR		
6	Cable gland plate	Stainless steel	EN 10088-1X1NiCrMoCu25-20-5 (1.4539)	AISI 904L
7	Cable gland	EPDM		
8	Shaft end	Duplex stainless steel	EN 10088-1-X2CrNiMoN22-5-3 (1.4462)	A276/A790-S31803
9	Removable sand guard	Duplex stainless steel	EN 10088-1-X2CrNiMoN22-5-3 (1.4462)	A276/A790-S31803
10	Mechanical seal cover	Duplex stainless steel	EN 10088-1-X2CrNiMoN22-5-3 (1.4462)	A276/A790-S31803
11	Mechanical seal	Carbon-graphite / Aluminium oxide		
12	Bush bearings	Carbon-graphite		
13	Elastomers	NBR		
14	Motor sleeve	Stainless steel	EN 10088-1X1NiCrMoCu25-20-5 (1.4539)	AISI 904L
15	Lower bracket	Duplex stainless steel	EN 10213-4-GX2CrNiMoCuN25-6-3-3 (1.4517)	
16	Thrust bearing bracket	Duplex stainless steel	EN 10213-4-GX2CrNiMoCuN25-6-3-3 (1.4517)	
17	Filling valve	Duplex stainless steel	EN 10088-1-X2CrNiMoN22-5-3 (1.4462)	A276/A790-S31803
18	Diaphragm	EPDM		
19	Lower cover	Duplex stainless steel	EN 10213-4-GX2CrNiMoCuN25-6-3-3 (1.4517)	
20	Bolts and screws	Duplex stainless steel	EN 10088-1-X2CrNiMoN22-5-3 (1.4462)	A276/A790-S31803
-	Cooling liquid	Water + antifreeze		

L8-L10wr-2p50-en_b_tm

L8W MOTOR SERIES IDENTIFICATION CODE

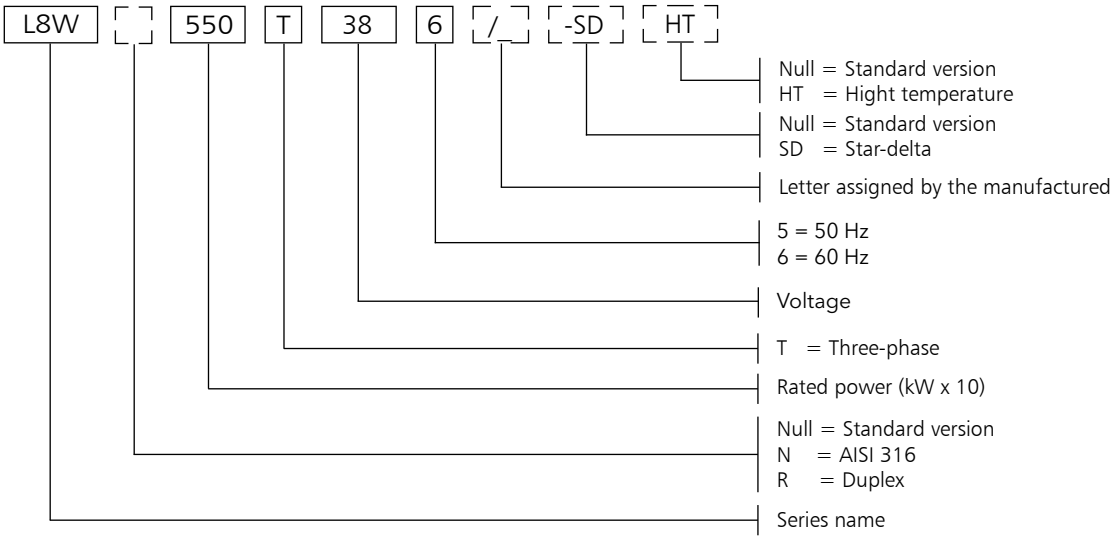

EXAMPLE: **L8W550T386/C HT**

L8W = Motor series L8W
550 = Rated power 55 kW
T = Three-phase
38 = Voltage 380 V
6 = Frequency 60 Hz.
HT = hight temperature.

RATING PLATE

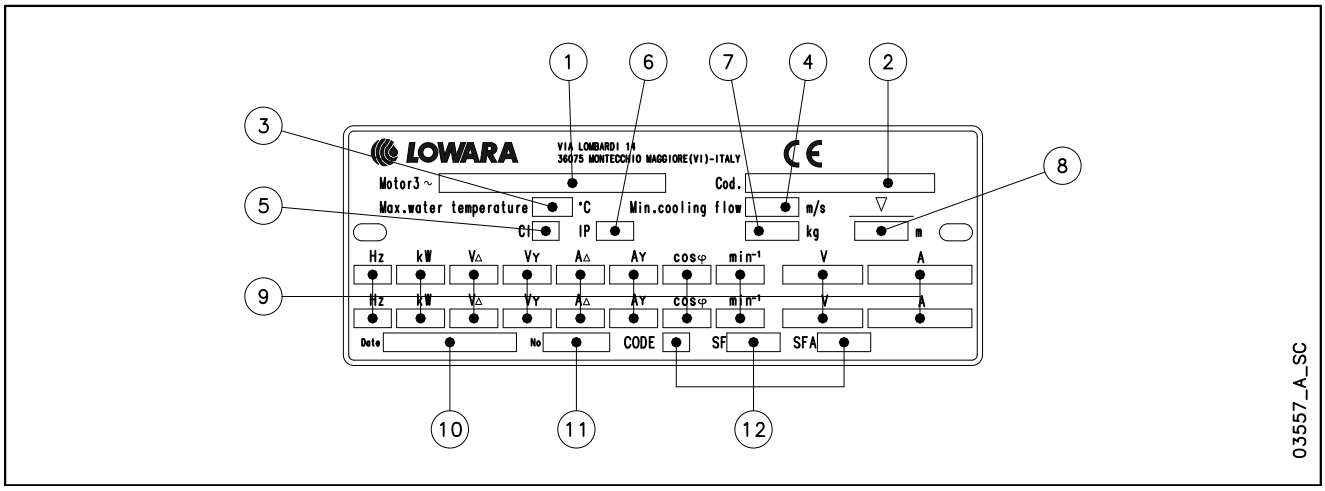

LEGEND

1 - Motor type
2 - Code
3 - Maximum water temperature
4 - Minimum water velocity
5 - Insulation class
6 - Protection class
7 - Weight
8 - Maximum immersion depht
9 - Operating characteristics
10 - Production date
11 - Serial number
12 - Characteristics at service factor

L8W MOTOR SERIES
DIMENSIONS AND WEIGHTS AT 60 Hz

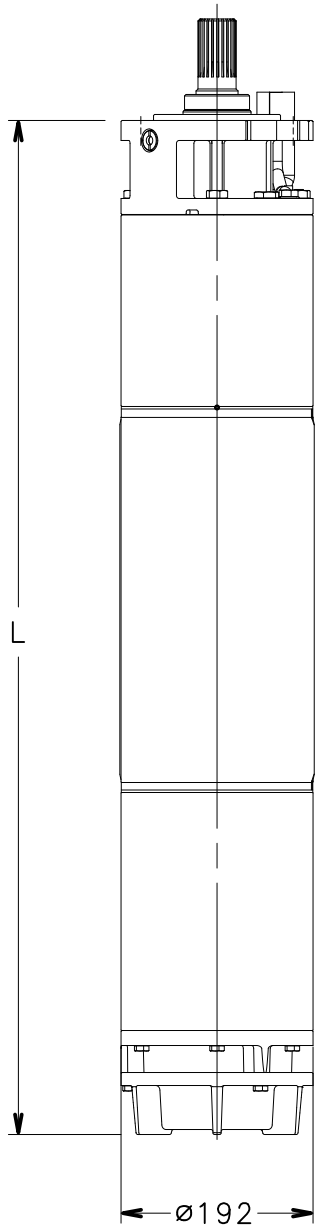

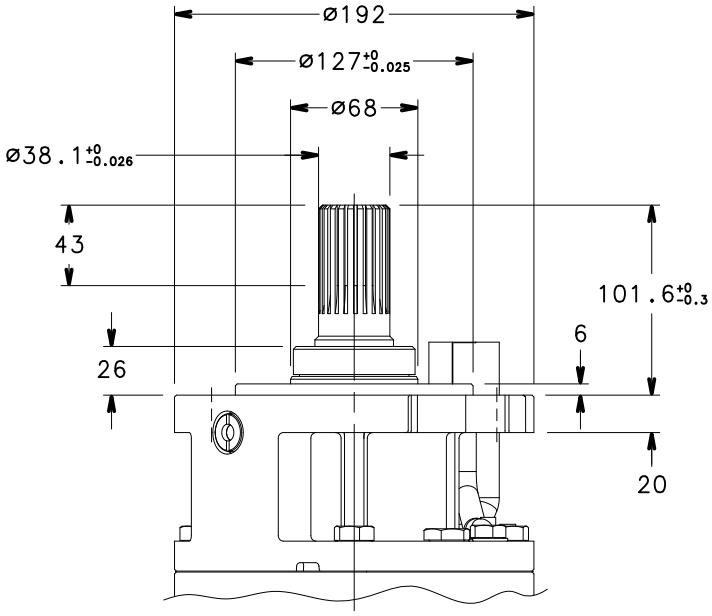

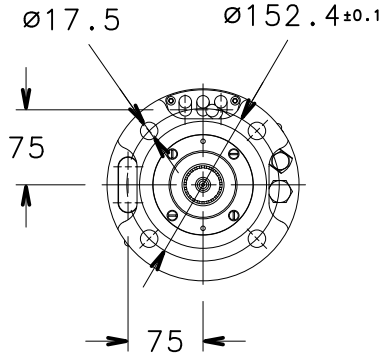

MOTOR TYPE	RATED POWER		DIMENSIONS (mm)	WEIGHT
	kW	HP	L mm	KG
L8W300T386-406 L8W300T386-406 HT	30	40	975	136
L8W370T386-406 L8W370T386-406 HT	37	50	1055	153
L8W450T386-406 L8W450T386-406 HT	45	60	1135	170
L8W520T386-406 L8W520T386-406 HT	52	70	1215	186
L8W550T386-406 L8W550T386-406 HT	55	75	1245	192
L8W600T386-406 L8W600T386-406 HT	60	80	1295	203
L8W670T386-406 L8W670T386-406 HT	67	90	1375	219
L8W750T386-406 L8W750T386-406 HT	75	100	1465	235
L8W830T386-406 L8W830T386-406 HT	83	110	1545	250
L8W930T386-406 L8W930T386-406 HT	93	125	1655	270
L8W1100T386-406 L8W1100T386-406 HT	110	150	1835	301

l8w/C-2p50_A_td

03550_C_DD

L8W MOTOR SERIES
THREE-PHASE OPERATING CHARACTERISTICS AT 60 Hz

MOTOR TYPE THREE-PHASE	RATED POWER		RATED VOLTAGE	OPERATING CHARACTERISTICS AT RATED POWER				DIRECT ON-LINE STARTING			SERVICE FACTOR	SERVICE FACTOR AMPS	MAX WATER TEMP.	CABLE TYPE Sec. (mm^2)		
	kW	HP	V	A	rpm	η %	cosφ	Is/In	Ts/Tn	Tmax/Tn	SF	SFA	°C	DOL	Y/D	L (m)
L8W300T386	30	40	380	67,8	3505	82,9	0,81	5,81	1,59	3,91	1,15	76,0	30	10	6	5,5
			400	68,7	3515	82,6	0,76	6,04	1,74	4,27		75,9				
L8W300T406			440	55,7	3490	82,6	0,86	5,43	1,45	3,57		63,6		10	6	
			460	54,5	3500	83,2	0,83	5,81	1,59	3,91		61,6				
			480	54,7	3510	82,6	0,80	6,04	1,74	4,27		61,1				
L8W370T386	37	50	380	83,3	3520	83,5	0,81	6,31	1,40	3,05	1,15	93,2	30	16	6	5,5
			400	85,6	3530	82,3	0,76	6,45	1,53	3,33		92,7				
L8W370T406			440	69,8	3510	82,8	0,84	5,96	1,28	2,78		79,0		10	6	
			460	68,8	3520	83,5	0,81	6,31	1,40	3,05		77,0				
			480	70,2	3525	82,5	0,77	6,45	1,53	3,33		77,5				
L8W450T386	45	60	380	96,4	3520	84,6	0,84	6,46	1,54	2,80	1,15	109	30	25	10	5,5
			400	96,6	3530	84,3	0,80	6,76	1,68	3,06		108				
L8W450T406			440	80,9	3510	84,3	0,87	6,04	1,41	2,56		92,3		16	6	
			460	79,1	3520	84,7	0,84	6,46	1,54	2,80		89,5				
			480	78,9	3530	84,3	0,81	6,76	1,68	3,06		88,3				
L8W520T386	52	70	380	110	3525	85,3	0,84	7,24	1,59	3,35	1,15	115	30	25	10	5,5
			400	110	3535	85,3	0,80	7,54	1,73	3,65		114				
L8W520T406			440	93,0	3520	85,1	0,86	6,80	1,45	3,06		106		16	6	
			460	91,3	3530	85,4	0,84	7,24	1,59	3,35		103				
			480	91,5	3535	85,3	0,80	7,54	1,73	3,65		102				
L8W550T386	55	75	380	118	3525	84,9	0,84	6,52	1,47	2,80	1,15	135	30	25	10	5,5
			400	118	3535	84,5	0,80	6,81	1,60	3,05		132				
L8W550T406			440	99	3515	84,7	0,86	6,08	1,34	2,56		115		25	10	
			460	96,5	3525	84,9	0,84	6,52	1,47	2,80		111				
			480	96,5	3530	84,6	0,81	6,81	1,60	3,05		109				
L8W600T386	60	80	380	131	3525	85,8	0,81	6,25	1,46	2,79	1,15	148	30	35	16	5,5
			400	134	3530	85,3	0,76	6,40	1,59	3,04		148				
L8W600T406			440	110	3520	85,6	0,84	5,93	1,33	2,55		125		25	10	
			460	109	3525	85,9	0,80	6,25	1,46	2,79		123				
			480	111	3530	85,3	0,76	6,40	1,59	3,04		123				
L8W670T386	67	90	380	143	3540	86,4	0,82	6,56	1,48	2,82	1,15	160	30	35	16	5,5
			400	146	3545	85,9	0,77	6,80	1,61	3,07		160				
L8W670T406			440	119	3530	86,3	0,86	6,18	1,35	2,58		134		25	10	
			460	117	3535	86,5	0,83	6,56	1,48	2,82		131				
			480	118	3540	86,0	0,79	6,80	1,61	3,07		130				
L8W750T386	75	100	380	154	3535	87,6	0,84	6,99	1,49	2,83	1,15	172	30	35	16	5,5
			400	155	3540	86,8	0,80	7,23	1,63	3,09		173				
L8W750T406			440	128	3520	86,7	0,89	6,45	1,36	2,58		143		35	16	
			460	124	3535	88,5	0,86	6,99	1,49	2,83		138				
			480	125	3540	86,8	0,83	7,23	1,63	3,09		139				
L8W830T386	83	110	380	171	3525	86,9	0,85	6,77	1,51	2,85	1,15	199	30	-	25	5,5
			400	163	3535	87,0	0,84	7,38	1,65	3,11		182				
L8W830T406			440	148	3515	86,2	0,85	6,16	1,38	2,60		178		35	16	
			460	141	3525	86,9	0,85	6,77	1,51	2,85		164				
			480	135	3535	87,1	0,85	7,38	1,65	3,11		150				
L8W930T386	93	125	380	200	3530	86,9	0,81	6,53	1,52	2,87	1,15	232	30	-	25	5,5
			400	196	3535	86,9	0,79	7,04	1,65	3,12		223				
L8W930T406			440	170	3545	86,5	0,83	6,04	1,39	2,63		199		35	16	
			460	164	3535	87,2	0,81	6,53	1,52	2,87		192				
			480	159	3530	86,6	0,81	7,04	1,65	3,12		183				
L8W1100T386	110	150	380	214	3530	87,4	0,89	7,19	1,51	2,86	1,15	242	30	-	25	5,5
			400	209	3540	87,5	0,87	7,68	1,65	3,12		235				
L8W1100T406			440	182	3525	87,2	0,90	6,66	1,38	2,61		208		-	25	
			460	176	3530	87,4	0,90	7,19	1,51	2,86		199				
			480	172	3535	87,5	0,88	7,68	1,65	3,12		194				

Ts/Tn = ratio between starting torque and nominal torque

Is/In = ratio between starting current and nominal current

Tmax/Tn = ratio between maximum torque and nominal torque

l8w-2p60_e_te

L8W HT MOTOR SERIES
THREE-PHASE OPERATING CHARACTERISTICS AT 60 Hz

MOTOR TYPE THREE-PHASE	RATED POWER		RATED VOLTAGE	OPERATING CHARACTERISTICS AT RATED POWER				DIRECT ON-LINE STARTING			SERVICE FACTOR	SERVICE FACTOR AMPS	MAX WATER TEMP.	CABLE TYPE Sec. (mm^2)		
	kW	HP	V	A	rpm	η %	cosφ	Is/In	Ts/Tn	Tmax/Tn	SF	SFA	°C	DOL	Y/D	L (m)
L8W300T386 HT	30	40	380	66,9	3515	82,1	0,83	5,92	1,45	1,97	1,15	75,2	45	16	6	5,5
			400	72,9	3525	80,7	0,74	5,94	1,56	2,12		79,8				
L8W300T406 HT			440	53,1	3505	82,4	0,90	5,60	1,31	1,77		60,7		10	6	
			460	52,9	3510	82,4	0,86	5,92	1,45	1,97		60,0				
			480	54,7	3520	81,9	0,81	5,94	1,56	2,12		61,0				
L8W370T386 HT	37	50	380	79,6	3520	83,4	0,85	6,51	1,15	2,29	1,15	89,8	45	25	10	5,5
			400	84,9	3525	82,4	0,76	6,45	1,24	2,47		93,6				
L8W370T406 HT			440	65,3	3510	83,6	0,89	6,24	1,04	2,06		74,4		16	6	
			460	65,9	3520	83,4	0,85	6,51	1,15	2,29		74,3				
			480	69,0	3525	82,7	0,78	6,45	1,24	2,47		76,4				
L8W450T386 HT	45	60	380	94,9	3515	82,7	0,87	6,51	1,26	2,10	1,15	108	45	25	10	5,5
			400	97,8	3525	82,3	0,81	6,69	1,36	2,27		109				
L8W450T406 HT			440	78,7	3505	82,8	0,91	6,10	1,13	1,89		91,3		16	10	
			460	77,7	3515	82,7	0,88	6,51	1,26	2,10		88,4				
			480	78,5	3520	82,6	0,84	6,69	1,36	2,27		88,5				
L8W520T386 HT	52	70	380	108	3520	83,8	0,88	7,32	1,31	2,51	1,15	123	45	35	1	5,5
			400	109	3530	83,6	0,83	7,50	1,41	2,71		121				
L8W520T406 HT			440	90,5	3515	83,8	0,90	6,87	1,18	2,26		104		25	10	
			460	89,4	3525	83,8	0,87	7,32	1,31	2,51		102				
			480	90,6	3530	83,7	0,83	7,50	1,41	2,71		101				
L8W550T386 HT	55	75	380	118	3530	84,1	0,84	6,46	1,21	2,10	1,15	132	45	35	16	5,5
			400	125	3535	83,3	0,77	6,50	1,30	2,26		137				
L8W550T406 HT			440	96,5	3520	84,5	0,89	6,14	1,09	1,89		110		25	10	
			460	96,5	3530	84,2	0,85	6,46	1,21	2,10		108				
			480	99,5	3535	83,6	0,80	6,50	1,30	2,26		110				
L8W600T386 HT	60	80	380	128	3535	84,8	0,84	6,36	1,20	2,10	1,15	144	45	35	16	5,5
			400	133	3540	84,1	0,78	6,34	1,29	2,26		147				
L8W600T406 HT			440	106	3530	84,9	0,87	6,05	1,08	1,89		121		35	16	
			460	106	3535	84,8	0,84	6,36	1,20	2,10		119				
			480	111	3540	84,1	0,78	6,34	1,29	2,26		122				
L8W670T386 HT	67	90	380	142	3535	85,4	0,84	6,58	1,22	2,11	1,15	160	45	-	25	5,5
			400	147	3540	85,1	0,77	6,73	1,32	2,28		162				
L8W670T406 HT			440	117	3525	85,5	0,88	6,18	1,10	1,90		133		35	16	
			460	116	3535	85,5	0,85	6,58	1,22	2,11		131				
			480	117	3540	85,3	0,80	6,73	1,32	2,28		131				
L8W750T386 HT	75	100	380	153	3535	86,4	0,86	6,93	1,21	2,12	1,15	172	45	-	25	5,5
			400	157	3540	86,0	0,80	7,18	1,30	2,29		174				
L8W750T406 HT			440	127	3525	86,1	0,90	6,43	1,09	1,91		144		35	16	
			460	124	3530	86,6	0,88	6,93	1,21	2,12		140				
			480	124	3535	86,2	0,85	7,18	1,30	2,29		138				
L8W830T386 HT	83	100	380	166	3525	86,5	0,88	6,91	1,24	2,14	1,15	188	45	-	25	5,5
			400	166	3535	86,4	0,84	7,19	1,34	2,31		186				
L8W830T406 HT			440	140	3520	86,5	0,90	6,42	1,12	1,93		161		-	16	
			460	137	3525	86,6	0,88	6,91	1,24	2,14		155				
			480	137	3535	86,4	0,85	7,19	1,34	2,31		153				
L8W930T386 HT	93	125	380	192	3530	86,4	0,85	6,85	1,24	2,15	1,15	216	45	-	35	5,5
			400	194	3535	86,1	0,80	7,14	1,34	2,32		216				
L8W930T406 HT			440	159	3520	86,4	0,89	6,36	1,12	1,94		181		-	25	
			460	155	3525	86,5	0,87	6,85	1,24	2,15		175				
			480	155	3535	86,4	0,84	7,14	1,34	2,32		173				
L8W1100T386 HT	110	150	380	223	3530	86,6	0,87	6,86	1,24	2,14	1,15	252	45	-	35	5,5
			400	221	3535	86,6	0,83	7,22	1,34	2,31		247				
L8W1100T406 HT			440	188	3520	86,3	0,89	6,33	1,12	1,93		215		-	25	
			460	183	3525	86,6	0,87	6,86	1,24	2,14		208				
			480	181	3535	86,6	0,85	7,22	1,34	2,31		203				

Ts/Tn = ratio between starting torque and nominal torque

Is/In = ratio between starting current and nominal current

Tmax/Tn = ratio between maximum torque and nominal torque

l8w-ht-2p60-en_c_te

10" Submersible motors
L10W Series

Submersible water filled rewindable motors.

- **Rewindable stator**
- **Mechanical seal**
- **Kingsbury type thrust bearing**
- **Approvals:**
  - **ACS**
  - **D.M. 174/2004**

SPECIFICATIONS

- **Stainless steel** outer sleeve.
- Shaft extension and coupling dimensions to **NEMA** standards.
- **Class insulation:**
  70 for standard version.
  85 for HT version.
- **Protection class:**
  IP68.
- Internal fluid suitable for contact with foodstuffs.
- Strong and durable compensating bellows.
- Axial load supported by angular bearings.
- Mechanical seal protected by sand guard.
- **Maximum immersion depth:**
  350 m.
- Suitable for both vertical / horizontal installationss from the pump
  to the motor.
- **Maximum number of starts per hour at regular intervals:**
  8.
- **Maximum water temperature**:
  30°C fro standard version
  45°C for HT version
  Max. temperature applies to motors working in a installation capable of delivering a flow of water around the motor jacket of at least 0,5 m/s.
- **Axial thrust**:
  65000 N from 83 to 150 kW.
- **Version**:
  Three-phase:
  from 93 to 150 kW
  380 V ± 6% 60 Hz
  from 93 to 150 kW
  460 V ± 6% 60 Hz

OPTIONAL FEATURES

- Silicon Carbide mechanical seal.
- **L10WN** version made of stainless steel.
- **L10WR** version made of Duplex stainless steel.
- **HT** version for hight temperature.
- Different voltages and frequencies.
- Motors with double cable outlet for star/delta start can be supplied upon request.
- Supply cable available with jiunction or not.

For application limits, refer to technical appendix chapter.

ACCESSORIES

- Temperature sensor **PT 100 / PTC.**
- Control panels.
- Drop cables
- Coupling flange.
- Cooling sleeve.
- Screws to fix the pump.

L10W - L10WN - L10WR MOTOR SERIES
MOTOR CROSS SECTION

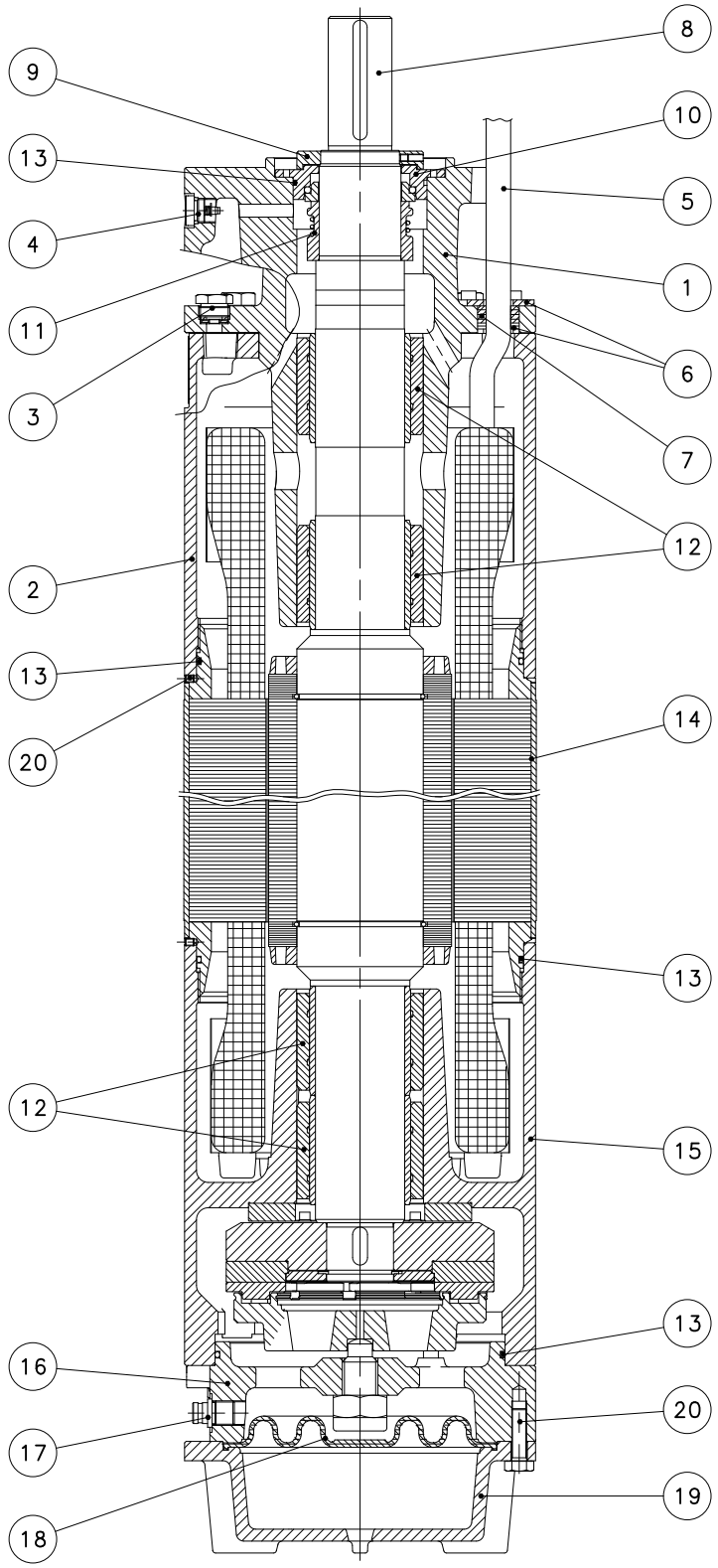

L10W TABLE OF MATERIALS

REF. N°	PART	MATERIAL	DESIGNATION EUROPE	USA
1	Upper bracket	Cast iron	EN 1561-EN-GJL-200 (EN-JL1030)	Class 25 B
2	Spacer	Cast iron	EN 1561-EN-GJL-200 (EN-JL1030)	Class 25 B
3	Filling plug (+OR)	Stainless steel (+NBR)	EN 10088-1-X5CrNiMo17-12-2 (1.4401)	AISI 316
4	Vent valve	Stainless steel	EN 10088-1-X5CrNiMo17-12-2 (1.4401)	AISI 316
5	Cable	EPR		
6	Cable gland plate	Stainless steel	EN 10088-1-X5CrNi18-10 (1.4301)	AISI 304
7	Cable gland	EPDM		
8	Shaft end	Duplex stainless steel	EN 10088-1-X2CrNiMoN22-5-3 (1.4462)	A276/A790-S31803
9	Removable sand guard	Stainless steel	EN 10088-1-X2CrNiMo17-12-2 (1.4404)	AISI 316L
10	Mechanical seal cover	Stainless steel	EN 10088-1-X2CrNiMo17-12-2 (1.4404)	AISI 316L
11	Mechanical seal	Carbon-graphite / Ceramic		
12	Bush bearings	Carbon-graphite		
13	Elastomers	NBR		
14	Motor sleeve	Stainless steel	EN 10088-1-X2CrNi19-11 (1.4306)	AISI304L
15	Lower bracket	Cast iron	EN 1561-EN-GJL-200 (EN-JL1030)	Class 25 B
16	Thrust bearing bracket	Cast iron	EN 1561-EN-GJL-200 (EN-JL1030)	Class 25 B
17	Filling valve	Stainless steel	EN 10088-1-X5CrNiMo17-12-2 (1.4401)	AISI 316
18	Diaphragm	EPDM		
19	Lower cover	Cast iron	EN 1561-EN-GJL-200 (EN-JL1030)	Class 25 B
20	Bolts and screws	Stainless steel	EN 10088-1-X5CrNi18-10 (1.4301)	AISI 304
-	Cooling liquid	Water + antifreeze		

L8-L10w-2p50-en_b_tm

L10WN TABLE OF MATERIALS

REF. N°	PART	MATERIAL	DESIGNATION EUROPE	USA
1	Upper bracket	Stainless steel	EN 10213-4 - GX5CrNiMo19-11-2 (1.4408)	ASTM CF-8M (AISI 316 cast)
2	Spacer	Stainless steel	EN 10213-4 - GX5CrNiMo19-11-2 (1.4408)	ASTM CF-8M (AISI 316 cast)
3	Filling plug (+OR)	Stainless steel	EN 10088-1-X5CrNiMo17-12-2 (1.4401)	AISI 316
4	Vent valve	Stainless steel	EN 10088-1-X5CrNiMo17-12-2 (1.4401)	AISI 316
5	Cable	EPR		
6	Cable gland plate	Stainless steel	EN 10088-1-X5CrNiMo17-12-2 (1.4401)	AISI 316
7	Cable gland	EPDM		
8	Shaft end	Duplex stainless steel	EN 10088-1-X2CrNiMoN22-5-3 (1.4462)	A276/A790-S31803
9	Removable sand guard	Stainless steel	EN 10088-1-X2CrNiMo17-12-2 (1.4404)	AISI 316L
10	Mechanical seal cover	Stainless steel	EN 10088-1-X2CrNiMo17-12-2 (1.4404)	AISI 316L
11	Mechanical seal	Carbon-graphite / Aluminium oxide		
12	Bush bearings	Carbon-graphite		
13	Elastomers	NBR		
14	Motor sleeve	Stainless steel	EN 10088-1-X2CrNiMo17-12-2 (1.4404)	AISI 316L
15	Lower bracket	Stainless steel	EN 10213-4 - GX5CrNiMo19-11-2 (1.4408)	ASTM CF-8M (AISI 316 cast)
16	Thrust bearing bracket	Stainless steel	EN 10213-4 - GX5CrNiMo19-11-2 (1.4408)	ASTM CF-8M (AISI 316 cast)
17	Filling valve	Stainless steel	EN 10088-1-X5CrNiMo17-12-2 (1.4401)	AISI 316
18	Diaphragm	EPDM		
19	Lower cover	Stainless steel	EN 10213-4 - GX5CrNiMo19-11-2 (1.4408)	ASTM CF-8M (AISI 316 cast)
20	Bolts and screws	Stainless steel	EN 10088-1-X5CrNiMo17-12-2 (1.4401)	AISI 316
-	Cooling liquid	Water + antifreeze		

L8-L10wn-2p50-en_b_tm

L10WR TABLE OF MATERIALS

REF. N°	PART	MATERIAL	DESIGNATION EUROPE	USA
1	Upper bracket	Duplex stainless steel	EN 10213-4-GX2CrNiMoCuN25-6-3-3 (1.4517)	
2	Spacer	Duplex stainless steel	EN 10213-4-GX2CrNiMoCuN25-6-3-3 (1.4517)	
3	Filling plug (+OR)	Duplex steel (+NBR)	EN 10088-1-X2CrNiMoN22-5-3 (1.4462)	A276/A790-S31803
4	Vent valve	Duplex stainless steel	EN 10088-1-X2CrNiMoN22-5-3 (1.4462)	A276/A790-S31803
5	Cable	EPR		
6	Cable gland plate	Stainless steel	EN 10088-1X1NiCrMoCu25-20-5 (1.4539)	AISI 904L
7	Cable gland	EPDM		
8	Shaft end	Duplex stainless steel	EN 10088-1-X2CrNiMoN22-5-3 (1.4462)	A276/A790-S31803
9	Removable sand guard	Duplex stainless steel	EN 10088-1-X2CrNiMoN22-5-3 (1.4462)	A276/A790-S31803
10	Mechanical seal cover	Duplex stainless steel	EN 10088-1-X2CrNiMoN22-5-3 (1.4462)	A276/A790-S31803
11	Mechanical seal	Carbon-graphite / Aluminium oxide		
12	Bush bearings	Carbon-graphite		
13	Elastomers	NBR		
14	Motor sleeve	Stainless steel	EN 10088-1X1NiCrMoCu25-20-5 (1.4539)	AISI 904L
15	Lower bracket	Duplex stainless steel	EN 10213-4-GX2CrNiMoCuN25-6-3-3 (1.4517)	
16	Thrust bearing bracket	Duplex stainless steel	EN 10213-4-GX2CrNiMoCuN25-6-3-3 (1.4517)	
17	Filling valve	Duplex stainless steel	EN 10088-1-X2CrNiMoN22-5-3 (1.4462)	A276/A790-S31803
18	Diaphragm	EPDM		
19	Lower cover	Duplex stainless steel	EN 10213-4-GX2CrNiMoCuN25-6-3-3 (1.4517)	
20	Bolts and screws	Duplex stainless steel	EN 10088-1-X2CrNiMoN22-5-3 (1.4462)	A276/A790-S31803
-	Cooling liquid	Water + antifreeze		

L8-L10wr-2p50-en_b_tm

L10W MOTOR SERIES IDENTIFICATION CODE

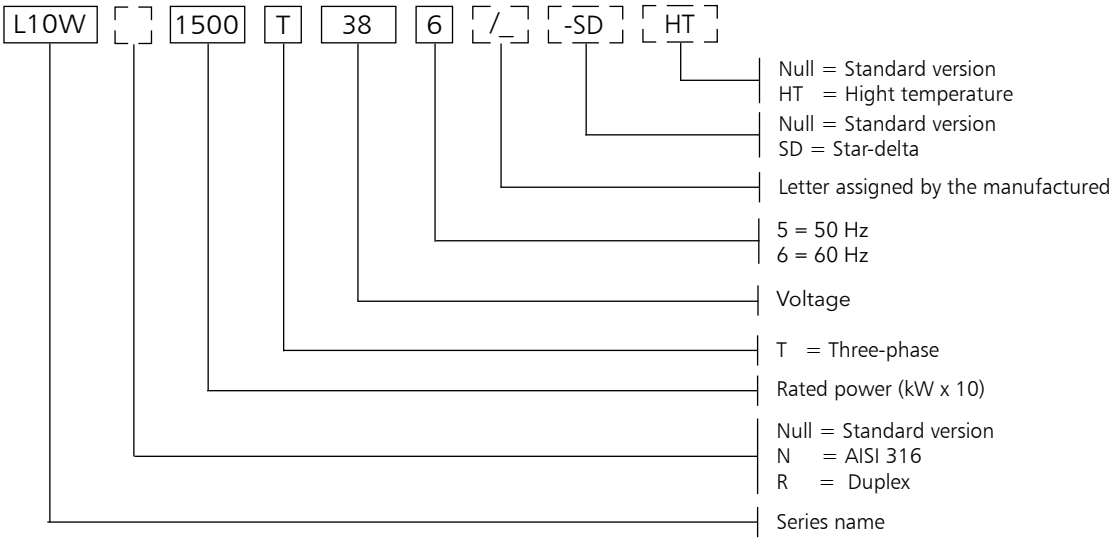

EXAMPLE: **L10W1500T4386/C HT**

L10W = Motor series L10W
1500 = Rated power 150 kW
T = Three-phase
38 = Voltage 380 V
6 = Frequency 60 Hz.
HT = hight temperature.

RATING PLATE

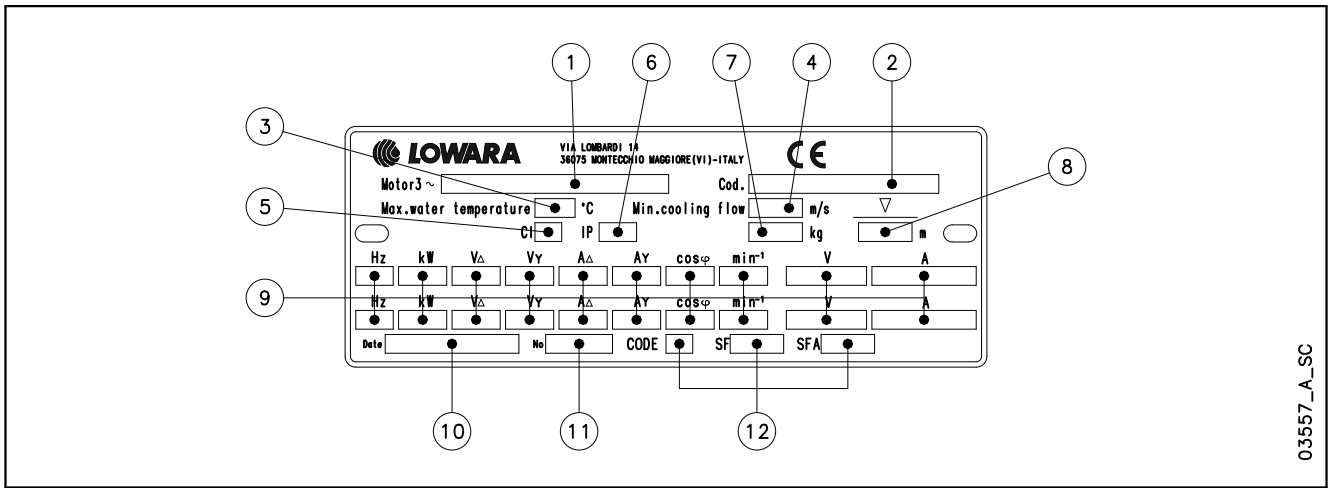

LEGEND

1 - Motor type
2 - Code
3 - Maximum water temperature
4 - Minimum water velocity
5 - Insulation class
6 - Protection class
7 - Weight
8 - Maximum immersion depht
9 - Operating characteristics
10 - Production date
11 - Serial number
12 - Characteristics at service factor

L10W MOTOR SERIES
DIMENSIONS AND WEIGHTS AT 60 Hz

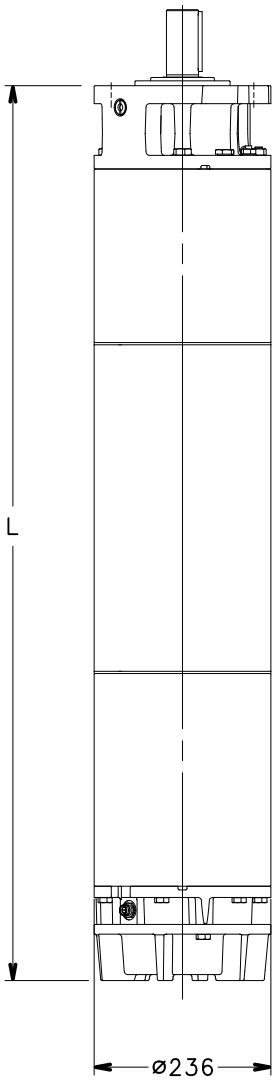

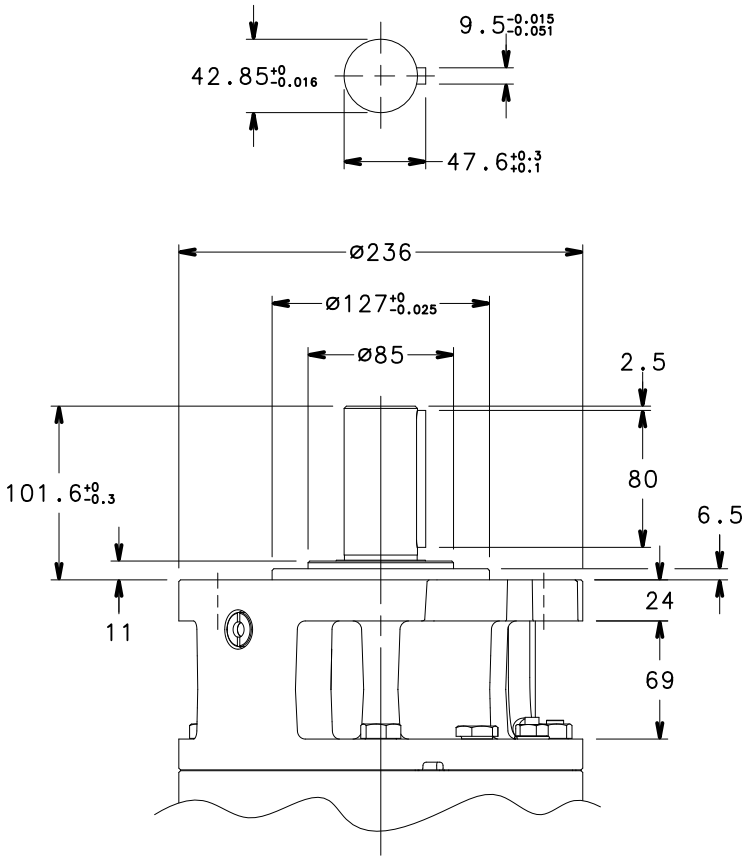

MOTOR TYPE	RATED POWER		DIMENSIONS (mm)	WEIGHT
	kW	HP	L	kg
L10W930T386-406	93	125	1562	360
L10W1100T386-406	110	150	1702	401
L10W1300T386-406	130	175	1852	448
L10W1500T386-406	150	200	1982	487

l10w-2p60_a_td

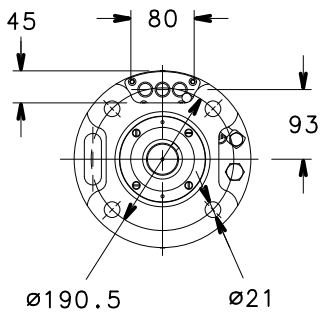

MOTOR TYPE	RATED POWER		DIMENSIONS (mm)	WEIGHT
	kW	HP	L	kg
L10W830T386-406 HT	83	110	1562	360
L10W930T386-406 HT	93	125	1702	401
L10W1100T386-406 HT	110	150	1852	448
L10W1300T386-406 HT	130	175	1982	487

l10w-ht-2p60_a_td

03554_C_DD

L10W MOTOR SERIES
THREE-PHASE OPERATING CHARACTERISTICS AT 60 Hz

MOTOR TYPE THREE-PHASE	RATED POWER		RATED VOLTAGE	OPERATING CHARACTERISTICS AT RATED POWER				DIRECT ON-LINE STARTING			SERVICE FACTOR	SERVICE FACTOR AMPS	MAX WATER TEMP.	CABLE TYPE Sec. (mm^2)		
	kW	HP	V	A	rpm	η %	cosφ	Is/In	Ts/Tn	Tmax/Tn	SF	SFA	°C	DOL	Y/D	L (m)
L10W930T386	93	125	380	199	3510	85,0	0,84	5,55	1,02	2,22	1,15	228	30	50	25	5
L10W930T406			460	164								189		35	16	
L10W1100T386	110	150	380	275	3520	85,5	0,82	6,38	1,43	2,19	1,15	316	30	70	25	5
L10W1100T406			460	227								261		50	16	
L10W1300T386	130	175	380	286	3520	85,5	0,81	6,31	1,5	2,22	1,15	329	30	70	35	5
L10W1300T406			460	236								271		50	25	
L10W1500T386	150	200	380	329	3525	85,5	0,81	6,24	1,56	2,22	1,15	379	30	70	35	5
L10W1500T406			460	272								313		70	35	

Ts/Tn = ratio between starting torque and nominal torque.
Tmax/Tn = ratio between maximum torque and nominal torque.

l10w-2p60_b_te

L10W HT MOTOR SERIES
THREE-PHASE OPERATING CHARACTERISTICS AT 60 Hz

MOTOR TYPE THREE-PHASE	RATED POWER		RATED VOLTAGE	OPERATING CHARACTERISTICS AT RATED POWER				DIRECT ON-LINE STARTING			SERVICE FACTOR	SERVICE FACTOR AMPS	MAX WATER TEMP.	CABLE TYPE Sec. (mm^2)		
	kW	HP	V	A	rpm	η %	cosφ	Is/In	Ts/Tn	Tmax/Tn	SF	SFA	°C	DOL	Y/D	L (m)
L10W830T386 HT	83	110	380	180	3530	85,2	0,82	6,11	1,15	2,48	1,15	202	45	50	25	5
L10W830T406 HT			460	149								167		35	16	
L10W930T386 HT	93	125	380	212	3545	86,0	0,78	8,27	1,69	2,58	1,15	236	45	70	25	5
L10W930T406 HT			460	175								195		50	16	
L10W1100T386 HT	110	150	380	254	3545	87,6	0,75	7,09	1,77	2,62	1,15	281	45	70	35	5
L10W1100T406 HT			460	210								232		50	25	
L10W1300T386 HT	130	175	380	298	3550	86,4	0,77	6,90	1,80	2,56	1,15	330	45	70	35	5
L10W1300T406 HT			460	246								273		70	35	

Ts/Tn = ratio between starting torque and nominal torque.
Tmax/Tn = ratio between maximum torque and nominal torque.

l10w-ht-2p60_a_te

12" Submersible motors
L12W Series

Submersible water filled rewindable motors.

- **Rewindable stator**
- **Mechanical seal**
- **Kingsbury type thrust bearing**
- **Approvals:**
  - **ACS**
  - **D.M. 174/2004**

SPECIFICATIONS

- **Stainless steel** outer sleeve.
- Shaft extension and coupling dimensions to NEMA standards.
- **Class insulation:**
  70 for standard version.
  85 for HT version.
- **Protection class:**
  IP68.
- Internal fluid suitable for contact with foodstuffs.
- Strong and durable compensating bellows.
- Axial load supported by angular bearings.
- Mechanical seal protected by sand guard.
- **Maximum immersion depth:**
  350 m.
- Suitable for both vertical / horizontal installations
- **Maximum number of starts per hour at regular intervals:**
  4.
- **Maximum water temperature:**
  30°C fro standard version
  45°C for HT version
  Max. temperature applies to motors working in a installation capable of delivering a flow of water around the motor jacket of at least 0,5 m/s.
- **Axial thrust:**
  65000 N from 185 to 300 kW.
- **Version:**
  Three-phase:
  from 185 to 300 kW
  380 V ± 6% 60 Hz
  from 185 to 300 kW
  460 V ± 6% 60 Hz

OPTIONAL FEATURES

- Silicon Carbide mechanical seal.
- **L12WN version** made of stainless steel.
- **L12WR version** made of Duplex stainless steel.
- **HT version** for hight temperature.
- Different voltages and frequencies
- Motors with double cable outlet for star/delta start can be supplied upon request (only for L12W1850T406).
- Supply cable available with jiunction or not.

For application limits, refer to technical appendix chapter.

ACCESSORIES

- Temperature sensor **PT 100 / PTC**.
- Control panels.
- Drop cables
- Coupling flange.
- Cooling sleeve.
- Screws to fix the pump.

L12W - L12WN - L12WR MOTOR SERIES
MOTOR CROSS SECTION

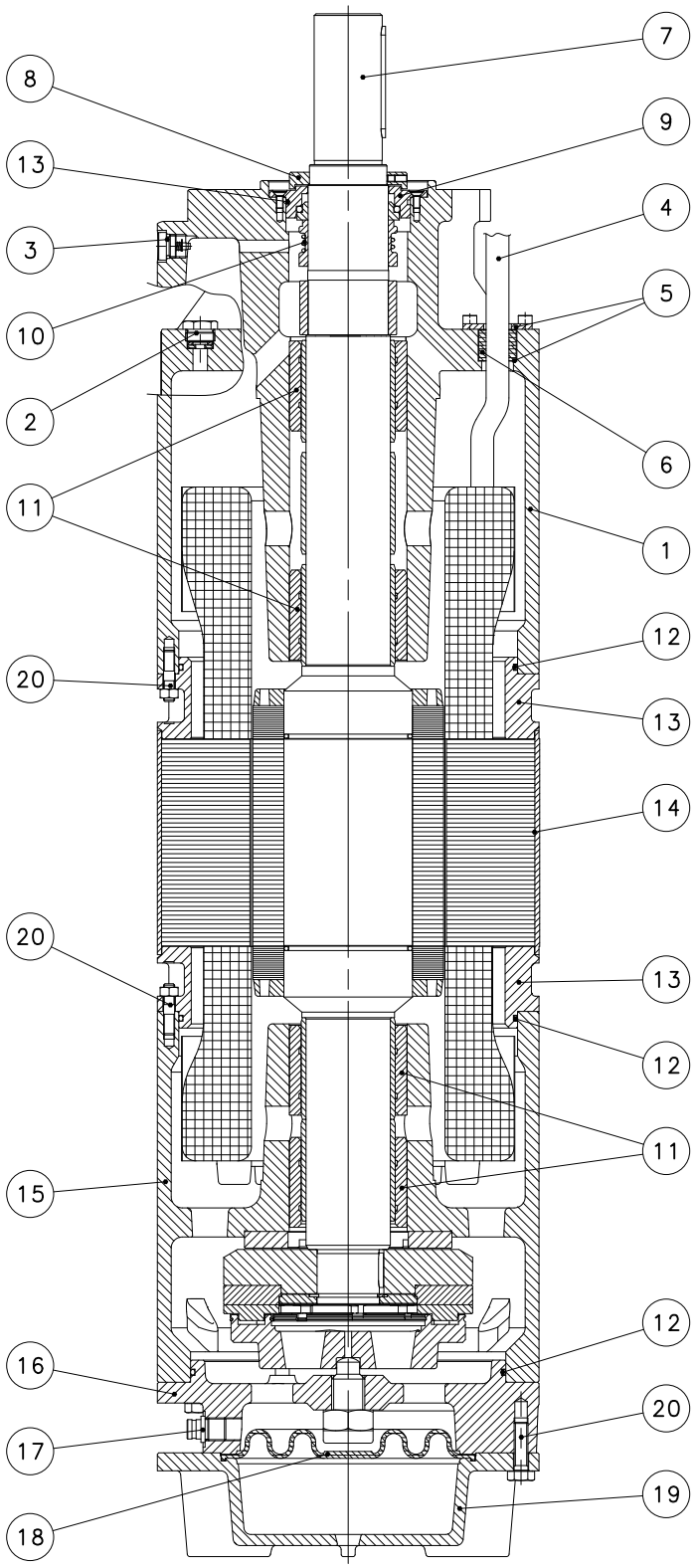

L12W TABLE OF MATERIALS

REF. N°	PART	MATERIAL	DESIGNATION EUROPE	USA
1	Upper bracket	Cast iron	EN 1561-EN-GJL-200 (EN-JL1030)	Class 25 B
2	Filling plug (+OR)	Stainless steel + NBR	EN 10088-1-X5CrNiMo17-12-2 (1.4401)	AISI 316
3	Vent valve	Stainless steel	EN 10088-1-X5CrNiMo17-12-2 (1.4401)	AISI 316
4	Cable	EPR		
5	Cable gland plate	Stainless steel	EN 10088-1-X5CrNiMo17-12-2 (1.4401)	AISI 316
6	Cable gland	EPDM		
7	Shaft end	Duplex stainless steel	EN 10088-1-X2CrNiMoN22-5-3 (1.4462)	A276/A790-S31803
8	Removable sand guard	Stainless steel	EN 10088-1-X2CrNiMo17-12-2 (1.4404)	AISI 316L
9	Mechanical seal cover	Stainless steel	EN 10088-1-X2CrNiMo17-12-2 (1.4404)	AISI 316L
10	Mechanical seal	Carbon-graphite / Ceramic		
11	Bush bearings	Carbon-graphite		
12	Elastomers	NBR		
13	Stator flanges	Carbon steel	EN 10297-1 - E355 (Fe 510)	
14	Motor sleeve	Stainless steel	EN 10088-1-X2CrNi19-11 (1.4306)	AISI304L
15	Lower bracket	Cast iron	EN 1561-EN-GJL-200 (EN-JL1030)	Class 25 B
16	Thrust bearing bracket	Cast iron	EN 1561-EN-GJL-200 (EN-JL1030)	Class 25 B
17	Filling valve	Stainless steel	EN 10088-1-X5CrNiMo17-12-2 (1.4401)	AISI 316
18	Diaphragm	EPDM		
19	Lower cover	Cast iron	EN 1561-EN-GJL-200 (EN-JL1030)	Class 25 B
20	Bolts and screws	Stainless steel	EN 10088-1-X5CrNi18-10 (1.4301)	AISI304
-	Cooling liquid	Water + antifreeze		

L12w-2p50-en_b_tm

L12WN TABLE OF MATERIALS

REF. N°	PART	MATERIAL	DESIGNATION EUROPE	USA
1	Upper bracket	Stainless steel	EN 10213-4 - GX5CrNiMo19-11-2 (1.4408)	ASTM CF-8M (AISI 316 cast)
2	Filling plug (+OR)	Stainless steel + NBR	EN 10088-1-X5CrNiMo17-12-2 (1.4401)	AISI 316
3	Vent valve	Stainless steel	EN 10088-1-X5CrNiMo17-12-2 (1.4401)	AISI 316
4	Cable	EPR		
5	Cable gland plate	Stainless steel	EN 10088-1-X5CrNiMo17-12-2 (1.4401)	AISI 316
6	Cable gland	EPDM		
7	Shaft end	Duplex stainless steel	EN 10088-1-X2CrNiMoN22-5-3 (1.4462)	A276/A790-S31803
8	Removable sand guard	Stainless steel	EN 10088-1-X2CrNiMo17-12-2 (1.4404)	AISI 316L
9	Mechanical seal cover	Stainless steel	EN 10088-1-X2CrNiMo17-12-2 (1.4404)	AISI 316L
10	Mechanical seal	Carbon-graphite / Ceramic		
11	Bush bearings	Carbon-graphite		
12	Elastomers	NBR		
13	Stator flanges	Stainless steel	EN 10088-1-X5CrNiMo17-12-2 (1.4401)	AISI 316
14	Motor sleeve	Stainless steel	EN 10088-1-X2CrNiMo17-12-2 (1.4404)	AISI 316L
15	Lower bracket	Stainless steel	EN 10213-4 - GX5CrNiMo19-11-2 (1.4408)	ASTM CF-8M (AISI 316 cast)
16	Thrust bearing bracket	Stainless steel	EN 10213-4 - GX5CrNiMo19-11-2 (1.4408)	ASTM CF-8M (AISI 316 cast)
17	Filling valve	Stainless steel	EN 10088-1-X5CrNiMo17-12-2 (1.4401)	AISI 316
18	Diaphragm	EPDM		
19	Lower cover	Stainless steel	EN 10213-4 - GX5CrNiMo19-11-2 (1.4408)	ASTM CF-8M (AISI 316 cast)
20	Bolts and screws	Stainless steel	EN 10088-1-X5CrNiMo17-12-2 (1.4401)	AISI 316
	Cooling liquid	Water + antifreeze		

L12wn-2p50-en_b_tm

L12WR TABLE OF MATERIALS

REF. N°	PART	MATERIAL	DESIGNATION EUROPE	USA
1	Upper bracket	Duplex stainless steel	EN 10213-4-GX2CrNiMoCuN25-6-3-3 (1.4517)	
2	Filling plug (+OR)	Duplex stainless steel +NBR	EN 10088-1-X2CrNiMoN22-5-3 (1.4462)	A276/A790-S31803
3	Vent valve	Duplex stainless steel	EN 10088-1-X2CrNiMoN22-5-3 (1.4462)	A276/A790-S31803
4	Cable	EPR		
5	Cable gland plate	Stainless steel	EN 10088-1X1NiCrMoCu25-20-5 (1.4539)	AISI 904L
6	Cable gland	EPDM		
7	Shaft end	Duplex stainless steel	EN 10088-1-X2CrNiMoN22-5-3 (1.4462)	A276/A790-S31803
8	Removable sand guard	Duplex stainless steel	EN 10088-1-X2CrNiMoN22-5-3 (1.4462)	A276/A790-S31803
9	Mechanical seal cover	Duplex stainless steel	EN 10088-1-X2CrNiMoN22-5-3 (1.4462)	A276/A790-S31803
10	Mechanical seal	Carbon-graphite / Ceramic		
11	Bush bearings	Carbon-graphite		
12	Elastomers	NBR		
13	Stator flanges	Duplex stainless steel	EN 10213-4-GX2CrNiMoCuN25-6-3-3 (1.4517)	
14	Motor sleeve	Stainless steel	EN 10088-1X1NiCrMoCu25-20-5 (1.4539)	AISI 904L
15	Lower bracket	Duplex stainless steel	EN 10213-4-GX2CrNiMoCuN25-6-3-3 (1.4517)	
16	Thrust bearing bracket	Duplex stainless steel	EN 10213-4-GX2CrNiMoCuN25-6-3-3 (1.4517)	
17	Filling valve	Duplex stainless steel	EN 10088-1-X2CrNiMoN22-5-3 (1.4462)	A276/A790-S31803
18	Diaphragm	EPDM		
19	Lower cover	Duplex stainless steel	EN 10213-4-GX2CrNiMoCuN25-6-3-3 (1.4517)	
20	Bolts and screws	Duplex stainless steel	EN 10088-1-X2CrNiMoN22-5-3 (1.4462)	A276/A790-S31803
	Cooling liquid	Water + antifreeze		

L12wr-2p50-en_b_tm

L12W MOTOR SERIES IDENTIFICATION CODE

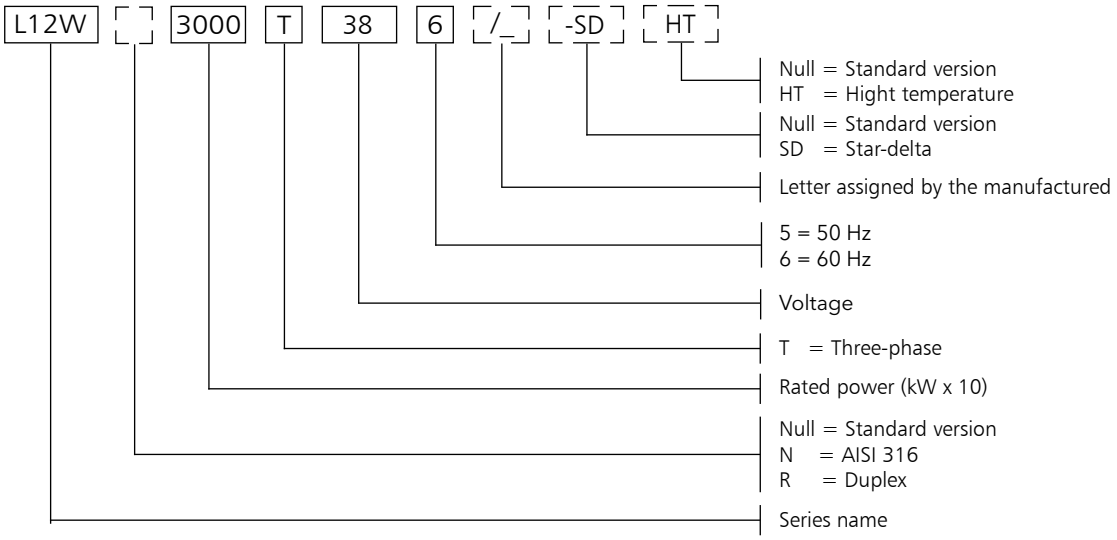

EXAMPLE: **L12W1850T386/A HT**

L12W = Motor series L12W
1850 = Rated power 185 kW
T = Three-phase
38 = Voltage 380 V
6 = Frequency 60 Hz.
HT = hight temperature.

RATING PLATE

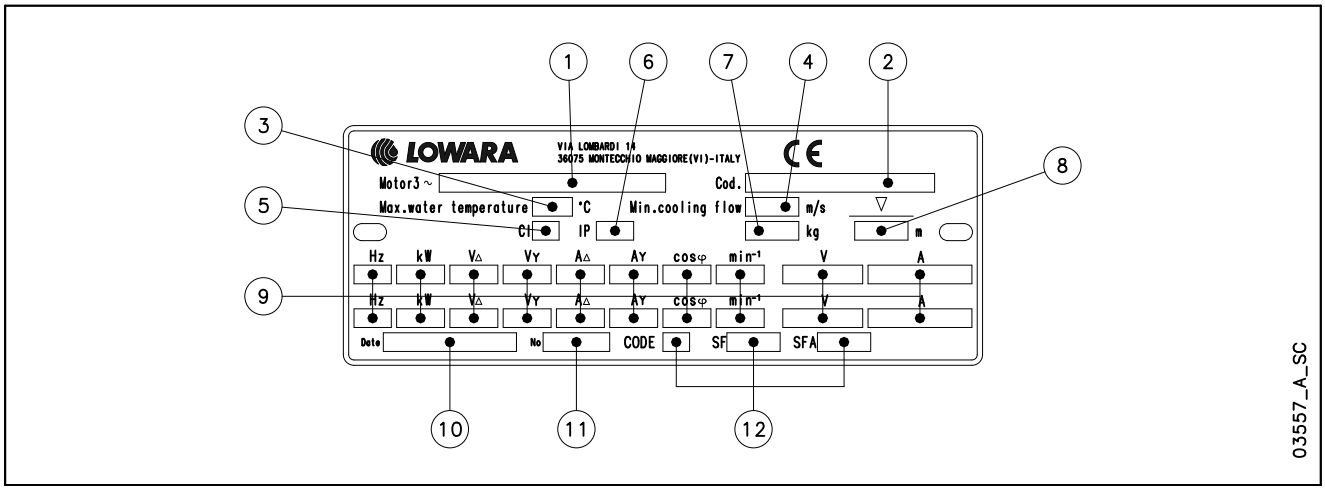

LEGEND

1 - Motor type
2 - Code
3 - Maximum water temperature
4 - Minimum water velocity
5 - Insulation class
6 - Protection class
7 - Weight
8 - Maximum immersion depht
9 - Operating characteristics
10 - Production date
11 - Serial number
12 - Characteristics at service factor

L12W MOTOR SERIES
DIMENSIONS AND WEIGHTS AT 60 Hz

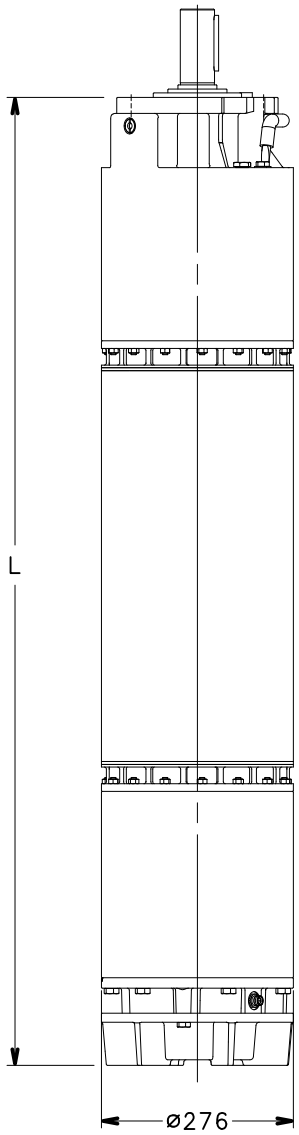

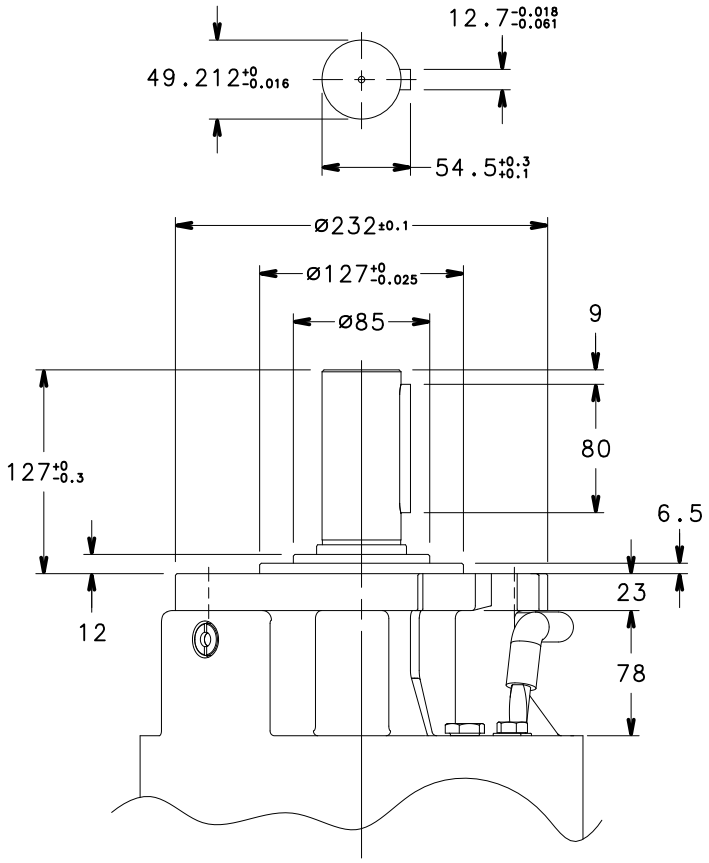

MOTOR TYPE	RATED POWER		DIMENSIONS (mm)	WEIGHT
	kW	HP	L	kg
L12W1850T386-406	185	250	1739	552
L12W2200T386-406	220	300	1889	616
L12W2600T386-406	260	350	2039	680
L12W3000T386-406	300	400	2189	745

l12w-2p60_a_td

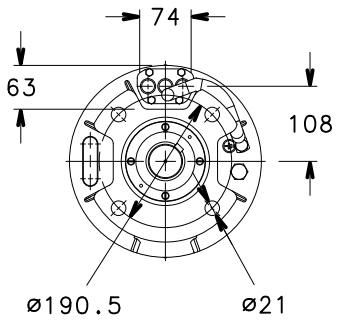

MOTOR TYPE	RATED POWER		DIMENSIONS (mm)	WEIGHT
	kW	HP	L	kg
L12W1500T386-406 HT	150	200	1739	552
L12W1850T386-406 HT	185	250	1889	616
L12W2200T386-406 HT	220	300	2039	680
L12W2600T386-406 HT	260	350	2189	745

l12w-ht-2p60_a_td

03553_C_DD

L12W MOTOR SERIES
THREE-PHASE OPERATING CHARACTERISTICS AT 60 Hz

MOTOR TYPE THREE-PHASE	RATED POWER		RATED VOLTAGE	OPERATING CHARACTERISTICS AT RATED POWER				DIRECT STARTING			SERVICE FACTOR	SERVICE FACTOR AMPS	MAX WATER TEMP.	CABLE TYPE Sec. (mm^2)		
	kW	HP	V	A	rpm	η %	cosφ	Is/In	Ts/Tn	Tmax/Tn	SF	SFA	°C	DOL	Y/D	L (m)
L12W1850T386	185	250	380	387	3515	85,5	0,85	6,59	1,50	2,22	1,15	445	30	95	50	5
L12W1850T406			460	320								368		70	35	
L12W2200T386	220	300	380	466	3515	85,5	0,84	6,66	1,41	2,22	1,15	536	30	120	70	5
L12W2200T406			460	385								443		95	50	
L12W2600T386	260	350	380	541	3515	86,0	0,85	6,05	1,41	2,22	1,15	622	30	150	70	5
L12W2600T406			460	447								514		120	50	
L12W3000T386	300	400	380	620	3515	86,5	0,85	6,43	1,18	2,22	1,15	713	30	-	95	5
L12W3000T406			460	512								589		2x70	70	

Ts/Tn = ratio between starting torque and nominal torque. l12w-2p60_b_te

Tmax/Tn = ratio between maximum torque and nominal torque.

L12W HT MOTOR SERIES
THREE-PHASE OPERATING CHARACTERISTICS AT 60 Hz

MOTOR TYPE THREE-PHASE	RATED POWER		RATED VOLTAGE	OPERATING CHARACTERISTICS AT RATED POWER				DIRECT STARTING			SERVICE FACTOR	SERVICE FACTOR AMPS	MAX WATER TEMP.	CABLE TYPE Sec. (mm^2)		
	kW	HP	V	A	rpm	η %	cosφ	Is/In	Ts/Tn	Tmax/Tn	SF	SFA	°C	DOL	Y/D	L (m)
L12W1850T386 HT	150	200	380	321	3545	88,0	0,82	7,96	1,85	2,74	1,15	363	45	95	50	5
L12W1850T406 HT			460	265								300		70	35	
L12W1850T386 HT	185	250	380	395	3540	88,0	0,80	7,86	1,68	2,64	1,15	442	45	120	70	5
L12W1850T406 HT			460	326								365		95	50	
L12W2200T386 HT	220	300	380	448	3535	89,0	0,82	7,31	1,67	2,62	1,15	514	45	150	70	5
L12W2200T406 HT			460	370								425		120	50	
L12W2600T386 HT	260	350	380	539	3525	88,5	0,83	7,40	1,36	2,56	1,15	611	45	-	95	5
L12W2600T406 HT			460	445								505		2x70	70	

Ts/Tn = ratio between starting torque and nominal torque. l12w-ht-2p60_a_te

Tmax/Tn = ratio between maximum torque and nominal torque.

4OS - L4C MOTOR SERIES
MOTOR - CONTROL PANEL COMBINATION TABLE

MOTOR TYPE 4OS - 4" SINGLE-PHASE	RATED POWER		CURRENT AT S.F. 220-230 V	CAPACITOR	PANEL TYPE					
	kW	HP	A	µF / 450 V	QSC...	QSCS...				
	0,37	0,5	3,45	20	...036	...036				
	0,55	0,75	4,73	25	...056	...056				
	0,75	1	6,09	35	...076	...076				
	1,1	1,5	7,61	40	...116	...116				
	1,5	2	10,1	50	...156	...156				
	2,2	3	15,7	50	...226	...226				

For different voltages, please contact our sales network.

4OSM-2p60-en_c_tc

MOTOR TYPE 4OS - 4" THREE-PHASE	RATED POWER		CURRENT AT S.F. 380 V		PANEL TYPE					
	kW	HP	A		QTD/...	Q3D/...	Q3I/...	Q3A/...	*Q3Y/...	Q3SF/...
	0,37	0,5	1,55		...05-07	...05-07	-	-	-	-
	0,55	0,75	1,88		...05-07	...05-07	-	-	-	-
	0,75	1	2,62		...07-15	...07-15	-	-	-	-
	1,1	1,5	3,27		...07-15	...07-15	-	-	-	-
	1,5	2	4,30		...15-22	...15-22	-	-	-	-
	2,2	3	6,25		...22-40	...22-40	-	-	-	-
	3	4	7,61		...22-40	...22-40	-	-	-	-
	4	5,5	9,05		...40-75	...40-75	...40-75	...40-75	...40-75	...75
	5,5	7,5	12,3		...40-75	...40-75	...40-75	...40-75	...40-75	...75
	7,5	10	19,4		-	...92-110	...92-110	...92-110	...92-110	...150

For different voltages, please contact our sales network.

4OST-2p60-en_c_tc

* require 6-wire suitable motor

MOTOR TYPE L4C - 4" SINGLE PHASE	RATED POWER		CURRENT AT S.F. 220-230 V	CAPACITOR	PANEL TYPE					
	kW	HP	A	µF / 450 V	QSC/...	QSCS/...				
	0,37	0,5	5,5	20	...036	...036				
	0,55	0,75	7,4	25	...056A	...056A				
	0,75	1	8,9	35	...076	...076				
	1,1	1,5	12,7	40	...116A	...116A				
	1,5	2	13,1	50	...156	...156				
	2,2	3	17,6	50	...226	...226				
	3,7	5	30,7	75	...406	...406				

For different voltages please contact our sales network

L4cm-2p60_d_tc

MOTOR TYPE L4C - 4" THREE PHASE	RATED POWER		CURRENT AT S.F. 380 V	PANEL TYPE					
	kW	HP	A	QTD/...	Q3D/...	Q3I/...	Q3A/...	*Q3Y/...	Q3SF/...
	0,37	0,5	2,3	...05-07	...05-07	-	-	-	-
	0,55	0,75	2,9	...07-15	...07-15	-	-	-	-
	0,75	1	3,4	...07-15	...07-15	-	-	-	-
	1,1	1,5	4,7	...15-22	...15-22	-	-	-	-
	1,5	2	5,9	...15-22	...15-22	-	-	-	-
	2,2	3	7,2	...22-40	...22-40	-	-	-	-
	3	4	9,5	...22-40	...22-40	-	-	-	...75
	4	5,5	11,6	...40-75	...40-75	...40-75	...40-75	...40-75	...75
	5,5	7,5	15,7	...40-75	...40-75	...40-75	...40-75	...40-75	...75
	7,5	10	20	-	...92-110	...92-110	...92-110	...92-110	...150

For different voltages please contact our sales network

L4ct-2p60_b_tc

* Require 6-wire suitable motor

L6C - L6W MOTOR SERIES
MOTOR - CONTROL PANEL COMBINATION TABLE

MOTOR TYPE L6C - 6" THREE-PHASE	RATED POWER		CURRENT AT S.F. 380 V	PANEL TYPE					
	kW	HP	A	QTD/...	Q3D/...	*Q3Y/...	Q3I/...	Q3A/...	Q3SF/...
	4	5,5	11,5	...40-75	...40-75	...40-75	...40-75	...40-75	...75
	5,5	7,5	16,1	...75-92	...75-92	...75-92	...75-92	...75-92	...75
	7,5	10	20	-	...92-110	...92-110	...92-110	...92-110	...150
	9,3	12,5	25	-	...110-150	...110-150	...110-150	...110-150	...150
	11	15	28,2	-	...110-150	...110-150	...110-150	...110-150	...150
	15	20	37,3	-	...150-185	...150-185	...150-185	...150-185	...220
	18,5	25	48,4	-	...185-220	...185-220	...185-220	...185-220	...300
	22	30	60,2	-	...220-300	...220-300	...220-300	...220-300	...370
	30	40	75	-	-	...370-450	...370-450	...370-450	...450
	37	50	90	-	-	...450-550	...450-550	...450-550	...550

For different voltages please contact our sales network

L6c-2p60_b_tc

MOTOR TYPE L6W - 6" THREE-PHASE	RATED POWER		CURRENT AT S.F. 380 V	PANEL TYPE					
	kW	HP	A	QTD/...	Q3D/...	Q3I/...	Q3A/...	Q3Y/...	Q3SF/...
	4	5,5	11,2	...40-75	...40-75	...40-75	...40-75	...40-75	...75
	5,5	7,5	15,1	...40-75	...40-75	...40-75	...40-75	...40-75	...75
	7,5	10	19,4	...75-92	...75-92	...75-92	...75-92	...75-92	...150
	9,3	12,5	23,8	-	...92-110	...92-110	...92-110	...92-110	...150
	11	15	27,8	-	...110-150	...110-150	...110-150	...110-150	...150
	13	17,5	32,9	-	...150-185	...150-185	...150-185	...150-185	...220
	15	20	36,6	-	...150-185	...150-185	...150-185	...150-185	...220
	18,5	25	45,1	-	...185-220	...185-220	...185-220	...185-220	...300
	22	30	53,8	-	...220-300	...220-300	...220-300	...220-300	...300
	26	35	66,5	-	...300-370	...300-370	...300-370	...300-370	...370
	30	40	72,6	-	...300-370	...300-370	...300-370	...300-370	...370
	37	50	95,9	-	-	...450-550	...450-550	...450-550	...550
MOTOR TYPE L6W HT - 6" THREE-PHASE	4	5,5	12,3	...40-75	...40-75	...40-75	...40-75	...40-75	...75
	5,5	7,5	15,5	...40-75	...40-75	...40-75	...40-75	...40-75	...75
	7,5	10	20,2	...92-110	...92-110	...92-110	...92-110	...92-110	...150
	9,3	12,5	24,2	-	...92-110	...92-110	...92-110	...92-110	...150
	11	15	28,9	-	...110-150	...110-150	...110-150	...110-150	...150
	13	17,5	34,1	-	...150-185	...150-185	...150-185	...150-185	...220
	15	20	38,3	-	...150-185	...150-185	...150-185	...150-185	...220
	18,5	25	46,3	-	...185-220	...185-220	...185-220	...185-220	...300
	22	30	58,6	-	...220-300	...220-300	...220-300	...220-300	...300
	26	35	64,8	-	...300-370	...300-370	...300-370	...300-370	...370
	30	40	82,1	-	...370-450	...370-450	...370-450	...370-450	...450

For different voltages, please contact our sales network.

L6w-2p60_b_tc

L8W - L10W - L12W MOTOR SERIES
MOTOR - CONTROL PANEL COMBINATION TABLE

MOTOR TYPE L8W - 8" THREE-PHASE	RATED POWER kW	RATED POWER HP	CURRENT AT S.F. 380 V A	PANEL TYPE	Q3I/...	Q3A/...	Q3SF/...		
	30	40	78,0		...370-450	...370-450	...450		
	37	50	96,1		...450-550	...450-550	...550		
	45	60	114		...550-750	...550-750	...590		
	52	70	134		...550-750	...550-750	...750		
	55	75	139		...750-900	...750-900	...750		
	60	80	149		...750-900	...750-900	...900		
	67	90	168		...750-900	...750-900	...900		
	75	100	187		...900-1100	...900-1100	...1100		
	83	110	206		...900-1100	...900-1100	...1100		
	93	125	231		...1100-1320	...1100-1320	...1100		
MOTOR TYPE L8W HT - 8" THREE-PHASE	30	40	78,7		...370-450	...370-450	...450		
	37	50	92,0		...450-550	...450-550	...550		
	45	60	107		...450-550	...450-550	...590		
	52	70	129		...550-750	...550-750	...750		
	55	75	136		...550-750	...550-750	...750		
	60	80	149		...750-900	...750-900	...900		
	67	90	166		...750-900	...750-900	...900		
	75	100	185		...900-1100	...900-1100	...900		
	83	110	197		...900-1100	...900-1100	...1100		

For different voltages, please contact our sales network.

L8w-2p60_c_tc

MOTOR TYPE L10W - 10" THREE-PHASE	RATED POWER kW	RATED POWER HP	CURRENT AT S.F. 380 V A	PANEL TYPE Q3I/...	Q3A/...	Q3SF/...			
	93	125	228	...1100-1320	...1100-1320	...1100			
	110	150	316	...1600-2000	...1600-2000	(1)			
	130	175	329	...1600-2000	...1600-2000	(1)			
	150	200	379	...1600-2000	...1600-2000	(1)			
MOTOR TYPE L10W HT - 10" THREE-PHASE	83	110	202	...900-1100	...900-1100	...1100			
	93	125	236	...1320-1600	...1320-1600	...1100			
	110	150	281	...1320-1600	...1320-1600	(1)			
	130	175	330	...1600-2000	...1600-2000	(1)			

(1) On request.

L10w-2p60_c_tc

For different voltages, please contact our sales network.

MOTOR TYPE L12W - 12" THREE-PHASE	RATED POWER kW	RATED POWER HP	CURRENT AT S.F. 380 V A	PANEL TYPE Q3I/...	Q3A/...	Q3SF/...			
	185	250	438	...2000-2500	...2000-2500	(1)			
	220	300	517	...2500-3150	...2500-3150	(1)			
	260	350	599	(1)	(1)	(1)			
	300	400	609	(1)	(1)	(1)			
MOTOR TYPE L12W HT - 12" THREE-PHASE	150	200	355	...1600-2000	...1600-2000	(1)			
	185	250	439	...2000-2500	...2000-2500	(1)			
	220	300	514	...2500-3150	...2500-3150	(1)			

(1) On request.

L12w-2p60_d_tc

For different voltages, please contact our sales network.

TECHNICAL APPENDIX

MOTORI SERIE 4OS - L4C - L6C - L6W - L8W - L10W - L12W

TABLE OF POWER REDUCTION COEFFICIENTS WITH INCREASED WATER TEMPERATURE

MOTOR TYPE	RATED POWER kW	TEMPERATURE °C							
		25	30	35	40	45	50	55	60
4OS	all models	1,00	1,00	1,00	0,90	0,80	0,70	0,60	-
L4C		1,00	1,00	1,00	0,95	0,90	0,85	0,80	-
L6C		1,00	1,00	1,00	0,95	0,80	0,75	0,70	0,60
L6W		1,00	1,00	0,75	-	-	-	-	-
L8W		1,00	1,00	0,75	-	-	-	-	-
L10W		1,00	1,00	0,75	-	-	-	-	-
L12W		1,00	1,00	0,75	-	-	-	-	-
L6W..HT		1,00	1,00	1,00	1,00	1,00	0,85	0,75	0,65
L8W..HT		1,00	1,00	1,00	1,00	1,00	0,85	0,75	0,65
L10W..HT		1,00	1,00	1,00	1,00	1,00	0,85	0,75	0,65
L12W..HT		1,00	1,00	1,00	1,00	1,00	0,85	0,75	0,65

4OS-LC-LW-derating-en_b_te

EXAMPLE 1
A 2,2 kW 4OS motor is to be used in 50°C water.
Motor power at 50 °C = 2,2 x 0,7 = 1,54 kW

EXAMPLE 2
A 2,2 kW L4C motor is to be used in 50°C water.
Motor power at 50 °C = 2,2 x 0,85 = 1,87 kW

EXAMPLE 3
A 7,5 kW L6C motor is to be used in 45°C water.
Motor power at 50 °C = 7,5 x 0,8 = 6 kW

EXAMPLE 4
A 15 kW L6W motor is to be used in 35°C water.
Motor power at 35 °C = 15 x 0,75 = 11,25 kW

SELECTING CABLE CROSS-SECTIONS FOR SUBMERSIBLE MOTORS

To select the cross-section of power cables for submersible pumps, consult the tables shown below. In these tables, the maximum lenghts of the power cable for each cross-section are shown for each motor and next to the various input voltage ratings.
Therefore, to find the required cable cross-section, simply read off the maximum permitted lenghts for each cross-section next to the selected motor and required input voltage.

E.g.:
A 120 m long power cable must be matched with a 230V L4C07M235 motor.
To determine the cross-section of the cable, simply move along the row of the 230V motor until you find the maximum lenght of 120 m or immediately above it and then read off the corresponding cross-section in that column.
In this case, the 4 mm^2 cable is selected.

N.B.: the tables include specific data (current and power factor) for each motor and voltage rating based on a maximum voltage drop of 4% (HD 384.5), a maximum cable temperature of 90°C, water installation similar to air installation at a temperature of 30°C.

CABLE TYPES

SECTION	THREE CORE FLAT					FOUR CORE FLAT					SINGLE CORE ROUND			FOUR CORE ROUND		
mm^2	Hmin mm	Lmin mm	Hmax mm	Lmax mm	Weight kg/km	Hmin mm	Lmin mm	Hmax mm	Lmax mm	Weight kg/km	Dmin mm	Dmax mm	Weight kg/km	Dmin mm	Dmax mm	Weight kg/km
4	8	19,2	9	20,8	250	8	25,2	9	26,8	395	6,5	7,5	92	14	16,1	360
6	8	19,2	9	20,8	325	8	25,2	9	26,8	470	7,4	8	118	15,7	18	475
10	8	19,2	9	20,8	535	8	25,2	9	26,8	710	8,6	10	183	20,9	23,9	836
16	-	-	-	-	-	-	-	-	-	-	9,6	11	251	23,8	27,1	1145
25	-	-	-	-	-	-	-	-	-	-	11	13	362	28,9	32,9	1716
35	-	-	-	-	-	-	-	-	-	-	12,5	14,5	497	-	-	-
50	-	-	-	-	-	-	-	-	-	-	15	17	669	-	-	-
70	-	-	-	-	-	-	-	-	-	-	17,5	19,5	901	-	-	-
95	-	-	-	-	-	-	-	-	-	-	20,5	22,5	1141	-	-	-
120	-	-	-	-	-	-	-	-	-	-	22	24,4	1435	-	-	-
150	-	-	-	-	-	-	-	-	-	-	25,2	28,3	1795	-	-	-
185	-	-	-	-	-	-	-	-	-	-	27,6	31	2156	-	-	-
240	-	-	-	-	-	-	-	-	-	-	30,6	34,5	2760	-	-	-

L-cavi-en_a_td

4OS SINGLE-PHASE, 60 Hz: SIZING OF ETHYLENE-PROPILENE (EPR) CABLES, DOL (DIRECT ON LINE) STARTING

MOTOR TYPE SINGLE-PHASE	RATED POWER Kw	RATED POWER HP	RATED VOLTAGE V	Cos φ	CURRENT AT S.F. A	VOLTAGE DROP %	Cable cross section: 4G x …mm²								
							mm²	1,5	2,5	4	6	10	16	25	35
							A max	23	32	42	54	75	100	127	158
							Maximum lenght in metres								
4OS03M236	0,37	0,5	220	0,99	4,50	4		71	118	191	286				
			230	0,98	4,42										
4OS05M236	0,55	0,8	220	0,99	6,23			51	85	137	206	356			
			230	0,97	6,00										
4OS07M236	0,75	1	220	0,97	7,41			43	73	117	176	304			
			230	0,94	7,36										
4OS11M236	1,1	1,5	220	0,99	9,34			33	56	91	137	237	373		
			230	0,99	9,05										
4OS15M236	1,5	2	220	0,99	12,2			25	42	69	104	181	285	441	
			230	0,97	11,9										
4OS22M236	2,2	3	220	0,93	17,1			17	31	51	78	135	212	324	
			230	0,90	17,1										
4OS03M116	0,37	0,5	110	0,99	9,02			17	29	47	71	123	193	299	418
			115	0,98	8,86										
4OS05M116	0,55	0,75	110	0,98	12,3			12	21	35	52	91	143	220	307
			115	0,94	12,3										
4OS07M116	0,75	1	110	0,98	14,5			10	18	29	44	76	120	186	259
			115	0,95	14,3										
4OS11M116	1,1	1,5	110	0,99	18,1			8	14	23	35	60	96	148	208
			115	0,98	17,7										

Exposed cable laid at a temperature of 30°C, maximum conductor temperature of 90°C

4osm-b_cavi-60_d_te

4OS THREE-PHASE, 60 Hz: SIZING OF ETHYLENE-PROPILENE (EPR) CABLES, DOL (DIRECT ON LINE) STARTING

MOTOR TYPE THREE-PHASE	RATED POWER Kw	RATED POWER HP	RATED VOLTAGE V	Cos φ	CURRENT AT S.F. A	VOLTAGE DROP %	Cable cross section: 4G x …mm²								
							mm²	1,5	2,5	4	6	10	16	25	35
							A max	23	32	42	54	75	100	127	158
							Maximum lenght in metres								
4OS03T236	0,37	0,5	220	0,62	3,17	4		184	305						
			230	0,56	3,31										
4OS05T236	0,55	0,75	220	0,71	4,00			127	212	339					
			230	0,65	4,05										
4OS07T236	0,75	1	220	0,66	5,21			104	174	279	414				
			230	0,59	5,51										
4OS11T236	1,1	1,5	220	0,72	6,53			76	127	204	304				
			230	0,65	6,70										
4OS15T236	1,5	2	220	0,71	8,40			59	99	160	239	407			
			230	0,65	8,73										
4OS22T236	2,2	3	220	0,71	11,6			41	71	115	172	294	454		
			230	0,64	12,5										
4OS30T236	3	4	220	0,79	14,5			29	50	82	124	213	331		
			230	0,72	14,8										
4OS40T236	4	5,5	220	0,85	17,7			21	37	62	94	163	254	386	
			230	0,81	17,4										
4OS55T236	5,5	7,5	220	0,86	24,4			-	33	52	78	133	206	312	428
			230	0,83	23,8										
4OS75T236	7,5	10	220	0,75	36,8			-	-	29	47	84	133	201	276
			230	0,68	38,1										
4OS03T386	0,37	0,5	380	0,62	1,83			552							
4OS05T386	0,55	0,75	380	0,71	2,31			382							
4OS07T386	0,75	1	380	0,66	3,01			315	522						
4OS11T386	1,1	1,5	380	0,72	3,77			230	383						
4OS15T386	1,5	2	380	0,71	4,85			180	301	482					
4OS22T386	2,2	3	380	0,71	6,69			129	217	349	519				
4OS30T386	3	4	380	0,79	8,35			92	156	251	376				
4OS40T386	4	5,5	380	0,85	10,2			69	118	191	287	492			
4OS55T386	5,5	7,5	380	0,86	14,1			47	82	135	203	351			
4OS75T386	7,5	10	380	0,75	21,2			32	59	99	150	261	406		

Exposed cable laid at a temperature of 30°C, maximum conductor temperature of 90°C

4ost-b_cavi-60_c_te

L4C SINGLE-PHASE, 60 Hz: SIZING OF ETHYLENE-PROPILENE (EPR) CABLES, DOL (DIRECT ON LINE) STARTING

MOTOR TYPE	RATED POWER		RATED VOLTAGE	Cos φ	CURRENT AT S.F.	VOLTAGE DROP	Cable cross section: 4G x …mm²								
							mm²	1,5	2,5	4	6	10	16	25	35
							A max	23	32	42	54	75	100	127	158
SINGLE-PHASE	Kw	HP	V		A	%	Maximum lenght in metres								
L4C03M236	0,37	0,5	220	0,93	5,3	4		63	106	171	256	440			
			230	0,89	5,5										
L4C05M236	0,55	0,75	220	0,89	7,0			49,6	83,4	135	202	346			
			230	0,84	7,4										
L4C07M236	0,75	1	220	0,93	8,5			40	68	110	165	284	443		
			230	0,89	8,9										
L4C11M236	1,1	1,5	220	0,88	12,2			27,5	47,2	77	116	199	312		
			230	0,84	12,7										
L4C15M236	1,5	2	220	0,98	13,1			23	39	65	98	170	267	412	
			230	0,97	12,8										
L4C22M236	2,2	3	220	0,96	17,6			16,3	29	48,1	73,2	127	201	309	
			230	0,96	17,1										
L4C40M236	4,0	5,5	220	0,93	30,7			-	15	26	41	73	116	179	249
			230	0,92	29,7										
L4C03M116	0,37	0,5	110	0,93	10,6			15,2	26	42,3	63,6	110	172	262	364
			115	0,89	11,0										
L4C05M116	0,55	0,75	110	0,89	14,0			12	20	33	50	86	134	205	282
			115	0,84	14,8										
L4C07M116	0,75	1	110	0,93	17,0			9,03	16,1	26,6	40,5	70,2	110	168	232
			115	0,89	17,8										

Exposed cable laid at a temperature of 30°C, maximum conductor temperature of 90°C

l4cm-cavi-60-en_b_te

L4C THREE-PHASE, 60 Hz: SIZING OF ETHYLENE-PROPILENE (EPR) CABLES, DOL (DIRECT ON LINE) STARTING

MOTOR TYPE	RATED POWER		RATED VOLTAGE	Cos φ	CURRENT AT S.F.	VOLTAGE DROP	Cable cross section: 4G x ...mm²								
							mm²	1,5	2,5	4	6	10	16	25	35
							A max	23	32	42	54	75	100	127	158
THREE-PHASE	Kw	HP	V		A	%	Maximum lenght in metres								
L4C03T236	0,37	0,5	220	0,78	3,5			131	218						
			230	0,76	3,8										
L4C05T236	0,55	0,75	220	0,82	4,6			95,8	160	257					
			230	0,77	4,8										
L4C07T236	0,75	1	220	0,74	5,3			92,9	155	249	371				
			230	0,72	5,6										
L4C11T236	1,1	1,5	220	0,75	7,5			63	106	171	255				
			230	0,72	7,8										
L4C15T236	1,5	2	220	0,71	9,4			52,2	88,4	143	213	363			
			230	0,68	9,8										
L4C22T236	2,2	3	220	0,77	11,5			39,5	67,7	110	165	282	438		
			230	0,75	12										
L4C30T236	3	4	220	0,73	16,5			27,4	48,4	79,8	121	207	321		
			230	0,7	17,3										
L4C40T236	4	5,5	220	0,8	18,8			20,6	36,9	61,3	93,2	161	252	380	
			230	0,78	19,2										
L4C55T236	5,5	7,5	220	0,8	25,4			-	25,6	43,6	67,3	118	185	280	385
			230	0,78	26										
L4C03T386	0,37	0,5	380	0,76	2,3	4		359							
L4C05T386	0,55	0,75	380	0,77	2,9			281							
L4C07T386	0,75	1	380	0,72	3,4			255	425						
L4C11T386	1,1	1,5	380	0,72	4,7			184	306						
L4C15T386	1,5	2	380	0,68	5,9			154	257	413					
L4C22T386	2,2	3	380	0,75	7,2			114	191	307	458				
L4C30T386	3	4	380	0,73	9,5			86,8	147	238	355				
L4C40T386	4	5,5	380	0,78	11,6			65,3	112	181	272	466			
L4C55T386	5,5	7,5	380	0,78	15,7			45,8	80,3	132	199	343			
L4C75T386	7,5	10	380	0,8	20			-	59,3	98,9	151	261	408		

Exposed cable laid at a temperature of 30°C, maximum conductor temperature of 90°C

l4c-cavi-60-en_b_te

L6C, 60 Hz: SIZING OF ETHYLENE-PROPILENE (EPR) CABLES DOL (DIRECT ON LINE) STARTING

MOTOR TYPE THREE-PHASE	RATED POWER Kw	RATED POWER HP	RATED VOLTAGE V	Cos φ	CURRENT AT S.F. A	VOLTAGE DROP %	Cable cross section: 4G x ...mm²								
							mm²	4	6	10	16	25	35	50	70
							A max	42	54	75	100	127	158	192	246
							Maximum lenght in metres								
L6C40T236	4	5,5	230	0,80	19,0	4		63	96	167	260	393	539		
L6C40T386			380	0,80	11,5			179	268	460					
L6C40T406			460	0,80	9,5			264	394						
L6C55T236	5,5	7,5	230	0,80	26,6			43	67	117	184	279	384	527	
L6C55T386			380	0,80	16,1			125	189	327	509				
L6C55T406			460	0,80	13,1			189	284	488	758				
L6C75T236	7,5	10	230	0,81	33,0			33	52	92	146	222	306	421	
L6C75T386			380	0,81	20,0			98	149	258	404				
L6C75T406			460	0,81	16,5			146	221	381	594				
L6C93T236	9,3	12,5	230	0,80	41,2			25	40	73	116	178	245	338	457
L6C93T386			380	0,80	25,0			77	118	207	325	492			
L6C93T406			460	0,80	20,6			116	177	307	479				
L6C110T236	11	15	230	0,82	46,6			-	33	62	99	153	212	294	399
L6C110T386			380	0,82	28,2			-	101	178	281	427			
L6C110T406			460	0,82	23,3			-	151	264	414				
L6C150T236	15	20	230	0,83	61,6			-	-	43	72	112	157	219	299
L6C150T386			380	0,83	37,3			-	72	130	207	317	438		
L6C150T406			460	0,83	30,8			-	109	194	307	468			
L6C185T236	18,5	25	230	0,80	80,0			-	-	-	54	86	121	169	232
L6C185T386			380	0,80	48,4			-	53	99	161	248	343	474	
L6C185T406			460	0,80	40			-	83	150	240	367	506		
L6C220T236	22	30	230	0,77	99,6			-	-	-	42	68	97	137	187
L6C220T386			380	0,77	60,2			-	-	79	130	202	280	387	523
L6C220T406			460	0,77	49,8			-	65	120	195	300	414		
L6C300T386	30	40	380	0,82	75,0			-	-	55	94	150	211	296	405
L6C300T406			460	0,82	62,0			-	-	87	144	225	314	438	
L6C370T386	37	50	380	0,88	90,0			-	-	-	70	114	164	233	325
L6C370T406			460	0,88	77,0			-	-	-	104	166	237	335	463

Exposed cable laid at a temperature of 30°C, maximum conductor temperature of 90°C

l6c_cavi-60-en_c_te

L6C, 60 Hz: SIZING OF ETHYLENE-PROPILENE (EPR) CABLES
Y/Δ (STAR / DELTA) STARTING

MOTOR TYPE THREE-PHASE	RATED POWER Kw	RATED POWER HP	RATED VOLTAGE V	Cos φ	RATED CURRENT A	VOLTAGE DROP %	Cable cross section: 4G x ...mm² + 3 x ...mm²								
							mm²	4	6	10	16	25	35	50	70
							A max*	73	94	130	173	220	274	333	426
							Maximum lenght in metres								
L6C40T236	4	5,5	230	0,80	19,0	4		114	170	292	453				
L6C40T386			380	0,80	11,5			314	468						
L6C40T406			460	0,80	9,5			460							
L6C55T236	5,5	7,5	230	0,80	26,6			80	120	207	323	487			
L6C55T386			380	0,80	16,1			223	333						
L6C55T406			460	0,80	13,1			333	497						
L6C75T236	7,5	10	230	0,81	33,0			62	95	164	257	388	533		
L6C75T386			380	0,81	20,0			176	264	453					
L6C75T406			460	0,81	16,5			260	389						
L6C93T236	9,3	12,5	230	0,80	41,2			49	76	132	207	313	430		
L6C93T386			380	0,80	25,0			141	212	365	568				
L6C93T406			460	0,80	20,6			209	314	538					
L6C110T236	11	15	230	0,82	46,6			42	65	113	178	271	373	514	
L6C110T386			380	0,82	28,2			121	183	316	492				
L6C110T406			460	0,82	23,3			179	270	464					
L6C150T236	15	20	230	0,83	61,6			29	46	83	132	202	278	385	522
L6C150T386			380	0,83	37,3			88	135	234	367	556			
L6C150T406			460	0,83	30,8			132	200	345	540				
L6C185T236	18,5	25	230	0,80	80,0			-	34	64	103	158	218	301	407
L6C185T386			380	0,80	48,4			67	105	184	289	439			
L6C185T406			460	0,80	40			102	156	272	426				
L6C220T236	22	30	230	0,77	99,6			-	-	50	83	128	178	246	332
L6C220T386			380	0,77	60,2			53	84	150	238	361	496		
L6C220T406			460	0,77	49,8			82	127	223	351	532			
L6C300T386	30	40	380	0,82	75,0			-	60	111	178	274	379	524	
L6C300T406			460	0,82	62,0			58	93	166	264	404	558		
L6C370T386	37	50	380	0,88	90,0			-	44	84	137	213	299	418	574
L6C370T406			460	0,88	77,0			40	66	122	197	305	425		

Exposed cable laid at a temperature of 30°C, maximum conductor temperature of 90°C

l6c_cavi-SD-60_a_te

*A max is the maximum rated current of the motor

L6W, 60 Hz: SIZING OF ETHYLENE-PROPILENE (EPR) CABLES DOL (DIRECT ON LINE) STARTING

MOTOR TYPE THREE-PHASE	RATED POWER Kw	RATED POWER HP	RATED VOLTAGE V	Cos φ AT S.F.	CURRENT AT S.F. A	VOLTAGE DROP %	Cable cross section: 4G x ...mm²								
							mm2	4	6	10	16	25	35	50	70
							A max	42	54	75	100	127	158	192	246
							Maximum lenght in metres								
L6W40T236	4	5,5	230	0,83	19,0	4		61	93	161	252	382	525		
L6W40T386			380	0,87	11,2			170	255	438					
L6W40T406			460	0,87	9,2			253	379						
L6W55T236	5,5	7,5	230	0,79	26,4			44	68	120	188	284	390		
L6W55T386			380	0,84	15,1			128	194	334	521				
L6W55T406			460	0,85	12,2			192	289	497					
L6W75T236	7,5	10	230	0,82	33,6			32	50	89	141	216	297	411	
L6W75T386			380	0,86	19,4			96	146	253	396				
L6W75T406			460	0,87	15,8			143	216	374	585				
L6W93T236	9,3	12,5	230	0,82	41,3			24	39	71	113	174	241	333	451
L6W93T386			380	0,86	23,8			76	117	204	321	489			
L6W93T406			460	0,87	19,5			114	173	301	472				
L6W110T236	11	15	230	0,83	47,9			-	32	59	95	147	205	284	386
L6W110T386			380	0,87	27,8			62	97	172	271	414			
L6W110T406			460	0,87	22,8			95	146	256	403	614			
L6W130T236	13	17,5	230	0,81	57,4			-	-	48	79	124	172	239	325
L6W130T386			380	0,85	32,9			52	82	146	232	354	490		
L6W130T406			460	0,88	26,4			80	123	217	343	524			
L6W150T236	15	20	230	0,84	62,5			-	-	42	70	109	153	214	293
L6W150T386			380	0,87	36,6			44	70	127	203	312	433		
L6W150T406			460	0,86	30,5			68	107	190	301	460			
L6W185T236	18,5	25	230	0,82	78,2			-	-	-	54	86	122	171	235
L6W185T386			380	0,86	45,1			-	55	101	164	253	351	489	
L6W185T406			460	0,87	36,7			-	85	153	245	376	522		
L6W220T236	22	30	230	0,82	91,9			-	-	-	44	71,1	102	144	198
L6W220T386			380	0,85	53,8			-	44	83	136	211	295	411	
L6W220T406			460	0,84	45,0			-	68	125	202	312	433	601	
L6W260T236	26	35	230	0,76	117			-	-	-	-	56	81	115	159
L6W260T386			380	0,81	66,5			-	-	66	110	173	243	338	461
L6W260T406			460	0,83	53,7			-	-	103	168	261	363	505	
L6W300T236	30	40	230	0,82	126			-	-	-	-	47,2	69,7	100	141
L6W300T386			380	0,86	72,6			-	-	55	94	150	212	298	410
L6W300T406			460	0,86	61,0			-	-	85	141	221	310	433	594
L6W370T386	37	50	380	0,82	95,9			-	-	-	68	112	160	226	313
L6W370T406			460	0,84	77,1			-	-	-	108	172	244	343	471

Exposed cable laid at a temperature of 30°C, maximum conductor temperature of 90°C

l6w_cavi-60_b_te

L6W, 60 Hz: SIZING OF ETHYLENE-PROPILENE (EPR) CABLES
Y/Δ (STAR / DELTA) STARTING

MOTOR TYPE THREE-PHASE	RATED POWER Kw	RATED POWER HP	RATED VOLTAGE V	Cos φ AT S.F.	CURRENT AT S.F. A	VOLTAGE DROP %	Cable cross section: 4G x ...mm²								
							mm2	4	6	10	16	25	35	50	70
							A max	42	54	75	100	127	158	192	246
							Maximum lenght in metres								
L6W40T236	4	5,5	230	0,83	19,0	4		61	93	161	252	382	525		
L6W40T386			380	0,87	11,2			170	255	438					
L6W40T406			460	0,87	9,2			253	379						
L6W55T236	5,5	7,5	230	0,79	26,4			44	68	120	188	284	390		
L6W55T386			380	0,84	15,1			128	194	334	521				
L6W55T406			460	0,85	12,2			192	289	497					
L6W75T236	7,5	10	230	0,82	33,6			32	50	89	141	216	297	411	
L6W75T386			380	0,86	19,4			96	146	253	396				
L6W75T406			460	0,87	15,8			143	216	374	585				
L6W93T236	9,3	12,5	230	0,82	41,3			24	39	71	113	174	241	333	451
L6W93T386			380	0,86	23,8			76	117	204	321	489			
L6W93T406			460	0,87	19,5			114	173	301	472				
L6W110T236	11	15	230	0,83	47,9			-	32	59	95	147	205	284	386
L6W110T386			380	0,87	27,8			62	97	172	271	414			
L6W110T406			460	0,87	22,8			95	146	256	403	614			
L6W130T236	13	17,5	230	0,81	57,4			-	-	48	79	124	172	239	325
L6W130T386			380	0,85	32,9			52	82	146	232	354	490		
L6W130T406			460	0,88	26,4			80	123	217	343	524			
L6W150T236	15	20	230	0,84	62,5			-	-	42	70	109	153	214	293
L6W150T386			380	0,87	36,6			44	70	127	203	312	433		
L6W150T406			460	0,86	30,5			68	107	190	301	460			
L6W185T236	18,5	25	230	0,82	78,2			-	-	-	54	86	122	171	235
L6W185T386			380	0,86	45,1			-	55	101	164	253	351	489	
L6W185T406			460	0,87	36,7			-	85	153	245	376	522		
L6W220T236	22	30	230	0,82	91,9			-	-	-	44	71,1	102	144	198
L6W220T386			380	0,85	53,8			-	44	83	136	211	295	411	
L6W220T406			460	0,84	45,0			-	68	125	202	312	433	601	
L6W260T236	26	35	230	0,76	117			-	-	-	-	56	81	115	159
L6W260T386			380	0,81	66,5			-	-	66	110	173	243	338	461
L6W260T406			460	0,83	53,7			-	-	103	168	261	363	505	
L6W300T236	30	40	230	0,82	126			-	-	-	-	47,2	69,7	100	141
L6W300T386			380	0,86	72,6			-	-	55	94	150	212	298	410
L6W300T406			460	0,86	61,0			-	-	85	141	221	310	433	594
L6W370T386	37	50	380	0,82	95,9			-	-	-	68	112	160	226	313
L6W370T406			460	0,84	77,1			-	-	-	108	172	244	343	471

Exposed cable laid at a temperature of 30°C, maximum conductor temperature of 90°C

l6w_cavi-60_b_te

L8W, 60 Hz: SIZING OF ETHYLENE-PROPILENE (EPR) CABLES DOL (DIRECT ON LINE) STARTING

MOTOR TYPE THREE-PHASE	RATED POWER Kw	RATED POWER HP	RATED VOLTAGE V	Cos φ AT S.F.	CURRENT AT S.F. A	VOLTAGE DROP %	Cable cross section: 4G x ...mm²									
							mm2	10	16	25	35	50	70	95	120	150
							A max	75	100	127	158	192	246	298	346	399
							Maximum lenght in metres									
L8W300T386	30	40	380	0,83	78,0	4		-	89	142	201	282	387	485		
L8W300T406			460	0,83	64,4			81	136	213	299	418				
L8W370T386	37	50	380	0,83	96,1			-	68	110	158	224	310	391	478	
L8W370T406			460	0,83	79,4			-	105	168	238	335	460			
L8W450T386	45	60	380	0,85	114			-	52	87	127	182	255	324	398	
L8W450T406			460	0,85	94,3			-	82	134	193	273	379	479		
L8W520T386	52	70	380	0,83	134			-	-	-	106	154	217	276	339	442
L8W520T406			460	0,83	110			-	-	112	163	232	324	409	501	
L8W550T386	55	75	380	0,85	139			-	-	-	99	144	205	262	323	426
L8W550T405			460	0,85	115			-	-	104	152	219	306	389	478	
L8W600T386	60	80	380	0,85	149			-	-	-	90	133	189	243	301	398
L8W600T406			460	0,85	123			-	-	95	140	202	284	362	446	
L8W670T386	67	90	380	0,86	168			-	-	-	-	113	163	212	263	352
L8W670T406			460	0,86	139			-	-	-	118	173	247	316	391	516
L8W750T386	75	100	380	0,85	187			-	-	-	-	99	145	189	235	318
L8W750T406			460	0,85	154			-	-	-	104	154	220	284	351	465
L8W830T386	83	110	380	0,85	206			-	-	-	-	-	128	168	211	288
L8W830T406			460	0,85	170			-	-	-	-	135	196	254	315	421
L8W930T386	93	125	380	0,87	231			-	-	-	-	-	109	146	184	257
L8W930T406			460	0,87	191			-	-	-	-	114	169	221	277	377

Exposed cable laid at a temperature of 30°C, maximum conductor temperature of 90°C

l8w_cavi-60_b_te

L8W, 60 Hz: SIZING OF ETHYLENE-PROPILENE (EPR) CABLES
Y/Δ (STAR / DELTA) STARTING

MOTOR TYPE THREE-PHASE	RATED POWER Kw	RATED POWER HP	RATED VOLTAGE V	Cos φ AT S.F.	CURRENT AT S.F. A	VOLTAGE DROP %	Cable cross section: 4G x ...mm2 + 3 x ...mm2									
							mm2	4	6	10	16	25	35	50	70	95
							A max*	73	94	130	173	220	274	333	426	516
							Maximum lenght in metres									
L8W300T386	30	40	380	0,83	78,0	4		-	57	105	169	260	361	500		
L8W300T406			460	0,83	64,4			55	88	158	251	385				
L8W370T386	37	50	380	0,83	96,1			-	-	81	134	208	290	403		
L8W370T406			460	0,83	79,4			-	67	124	201	309	429			
L8W450T386	45	60	380	0,85	114			-	-	64	107	169	237	332	456	
L8W450T406			460	0,85	94,3			-	52	99	162	252	352	491		
L8W520T386	52	70	380	0,83	134			-	-	-	90	143	203	285	391	
L8W520T406			460	0,83	110			-	-	83	138	216	303	422		
L8W550T386	55	75	380	0,85	139			-	-	-	84	134	191	269	371	
L8W550T406			460	0,85	115			-	-	77	128	203	285	399		
L8W600T386	60	80	380	0,85	149			-	-	-	77	124	177	250	345	487
L8W600T406			460	0,85	123			-	-	70	118	188	265	372		
L8W670T386	67	90	380	0,86	168			-	-	-	64	106	152	217	302	430
L8W670T406			460	0,86	139			-	-	-	100	161	229	324	447	
L8W750T386	75	100	380	0,85	187			-	-	-	-	94	136	195	272	389
L8W750T406			460	0,85	154			-	-	-	89	144	206	292	403	
L8W830T386	83	110	380	0,85	206			-	-	-	-	82	121	174	244	352
L8W830T406			460	0,85	170			-	-	-	77,6	127	184	261	363	
L8W930T386	93	125	380	0,87	231			-	-	-	-	69	103	150	213	313
L8W930T406			460	0,87	191			-	-	-	-	108	158	227	318	458

Exposed cable laid at a temperature of 30°C, maximum conductor temperature of 90°C

l8w_cavi-SD-60_a_te

*A max is the maximum rated current of the motor

L10W, 60 Hz: SIZING OF ETHYLENE-PROPILENE (EPR) CABLES DOL (DIRECT ON LINE) STARTING

MOTOR TYPE THREE-PHASE	RATED POWER Kw	RATED POWER HP	RATED VOLTAGE V	Cos φ AT S.F.	CURRENT AT S.F. A	VOLTAGE DROP %	Cable cross section: 4G x ...mm²								
							mm2	50	70	95	120	150	185	240	300
							A max	192	246	298	346	399	456	538	621
							Maximum lenght in metres								
L10W930T386	93	125	380	0,86	228	4		-	112	148	187	225	262	318	365
L10W930T406			460	0,86	189			117	172	225	281	336	390	470	538
L10W1100T386	110	150	380	0,83	316			-	-	-	127	155	182	221	254
L10W1100T406			460	0,83	261			-	-	154	194	234	273	329	377
L10W1300T386	130	175	380	0,82	329			-	-	-	121	148	174	211	242
L10W1300T406			460	0,82	271			-	-	147	186	224	261	314	359
L10W1500T386	150	200	380	0,83	379			-	-	-	-	124	147	180	209
L10W1500T406			460	0,83	313			-	-	-	156	190	223	270	311

Exposed cable laid at a temperature of 30°C, maximum conductor temperature of 90°C

l10w_cavi-60_b_te

L10W, 60 Hz: SIZING OF ETHYLENE-PROPILENE (EPR) CABLES Y/Δ (STAR / DELTA) STARTING

MOTOR TYPE THREE-PHASE	RATED POWER Kw	RATED POWER HP	RATED VOLTAGE V	Cos φ AT S.F.	CURRENT AT S.F. A	VOLTAGE DROP %	Cable cross section: 4G x ...mm2 + 3 x ...mm2								
							mm2	25	35	50	70	95	120	150	185
							A max*	220	274	333	426	516	599	691	790
							Maximum lenght in metres								
L10W930T386	93	125	380	0,86	228	4		-	105	153	216	277	342	405	468
L10W930T406			460	0,86	189			111	161	231	323	411	506		
L10W1100T386	110	150	380	0,83	316			-	-	104	151	195	242	288	332
L10W1100T406			460	0,83	261			-	109	161	229	293	361	426	490
L10W1300T386	130	175	380	0,82	329			-	-	99	145	188	233	276	318
L10W1300T406			460	0,82	271			-	105	154	220	282	347	409	470
L10W1500T386	150	200	380	0,83	379			-	-	-	120	158	198	236	274
L10W1500T406			460	0,83	313			-	-	127	185	239	296	352	406

Exposed cable laid at a temperature of 30°C, maximum conductor temperature of 90°C

l10w_cavi-SD-60_a_te

*A max is the maximum rated current of the motor

L12W, 60 Hz: SIZING OF ETHYLENE-PROPILENE (EPR) CABLES DOL (DIRECT ON LINE) STARTING

MOTOR TYPE THREE-PHASE	RATED POWER Kw	RATED POWER HP	RATED VOLTAGE V	Cos φ AT S.F.	CURRENT AT S.F. A	VOLTAGE DROP %	Cable cross section: 4G x ...mm²								
							mm2	50	70	95	120	150	185	240	300
							A max	192	246	298	346	399	456	538	621
							Maximum lenght in metres								
L12W1850T386	185	250	380	0,86	438	4		-	-	-	-	-	123	154	181
L12W1850T406			460	0,86	361			-	-	-	-	158	189	233	272
L12W2200T386	220	300	380	0,87	517			-	-	-	-	-	-	126	150
L12W2200T406			460	0,87	424			-	-	-	-	-	155	195	229
L12W2600T386	260	350	380	0,87	599			-	-	-	-	-	-	-	126
L12W2600T406			460	0,87	488			-	-	-	-	-	-	164	195
L12W3000T386	300	400	380	-	-			-	-	-	-	-	-	-	-
L12W3000T406			460	0,81	603			-	-	-	-	-	-	-	147

Exposed cable laid at a temperature of 30°C, maximum conductor temperature of 90°C

l12w_cavi-60_c_te

L12W, 60 Hz: SIZING OF ETHYLENE-PROPILENE (EPR) CABLES Y/Δ (STAR / DELTA) STARTING

MOTOR TYPE THREE-PHASE	RATED POWER Kw	RATED POWER HP	RATED VOLTAGE V	Cos φ AT S.F.	CURRENT AT S.F. A	VOLTAGE DROP %	Cable cross section: 4G x ...mm2 + 3 x ...mm2								
							mm2	50	70	95	120	150	185	240	300
							A max*	333	426	516	599	691	790	932	1076
							Maximum lenght in metres								
L12W1850T386	185	250	380	0,86	438	4		-	-	131	166	200	235	285	328
L12W1850T406			460	0,86	361			-	152	200	251	301	351	423	486
L12W2200T386	220	300	380	0,87	517			-	-	-	135	165	195	239	278
L12W2200T406			460	0,87	424			-	122	164	208	252	295	359	414
L12W2600T386	260	350	380	0,87	599			-	-	-	111	138	164	203	237
L12W2600T406			460	0,87	488			-	100	137	175	214	252	309	357
L12W3000T386	300	400	380	-	-			-	-	-	-	-	-	-	-
L12W3000T406			460	0,81	603			-	-	-	-	167	197	239	274

Exposed cable laid at a temperature of 30°C, maximum conductor temperature of 90°C

l12w_cavi-SD-60_c_te

*A max is the maximum rated current of the motor

SPLICE BETWEEN DROP CABLE AND MOTOR CABLE

MOTOR TYPE	POWER kW	TYPE OF SPLICE	FOUR-CORE DROP CABLE - SECTION (mm^2)												
			1,5	2,5	4	6	10	16	25	35	50	70	95	120	150
4OS L4C	0,37 - 7,5	Resin-filled method	GR11	GR11	GR12	GR12	GR12	GR13	GR13	GR14	GR14	GR15	GR15	GR16	-
		Heat-shrink method	GT11	GT11	GT12	GT12	GT13	GT14	GT15	GT16	-	-	-	-	-
		Tape method	Self-vulcanizing tape + self-vulcanizing sealing putty and PVC tape (1)												
L6C L6W	4 - 37	Resin-filled method	-	-	GR12	GR12	GR12	GR13	GR13	GR14	GR14	GR15	GR15	GR16	-
		Heat-shrink method	-	-	GT12	GT12	GT13	GT14	GT15	GT16	-	-	-	-	-
		Tape method	Self-vulcanizing tape + self-vulcanizing sealing putty and PVC tape (1)												

MOTOR TYPE	POWER kW	TYPE OF SPLICE	THREE-CORE DROP CABLE - SECTION (mm^2)												
			1,5	2,5	4	6	10	16	25	35	50	70	95	120	150
L6C L6W	4 - 37	Resin-filled method	-	-	GR12	GR12	GR12	GR13	GR13	GR14	GR14	GR15	GR15	GR16	-
		Heat-shrink method	-	-	GT12	GT12	GT13	GT14	GT15	GT16	-	-	-	-	-
		Tape method	Self-vulcanizing tape + PVC tape												

MOTOR TYPE	POWER kW	TYPE OF SPLICE	SINGLE-CORE DROP CABLE - SECTION (mm^2)												
			1,5	2,5	4	6	10	16	25	35	50	70	95	120	150
L8W L10W L12W	30 - 300	Resin-filled method	-	-	-	GR12	GR12	GR17	GR17	GR17	GR18	GR18	GR18	GR19	GR19
		Heat-shrink method	-	-	-	-	-	-	-	-	-	-	-	-	-
		Tape method	Self-vulcanizing tape + PVC tape												

(1) Use self-vulcanizing sealing putty to fill in the gaps between the three-conductor cable and the ground cable in the area covered by the final layer of tape, to restore continuity to the protective sheath.

RESIN-FILLED SPLICES				HEAT-SHRINK SPLICES			
TYPE	L x D [mm]	TYPE	L x D [mm]	TYPE	L x D [mm]	TYPE	L x D [mm]
GR11	190 x 45	GR14	357 x 62	GT11	330	GT14	330
GR12	190 x 51	GR15	325 x 95	GT12	330	GT15	500
GR13	240 x 62	GR16	520 x 100	GT13	330	GT16	500

L-giunzioni-en_e_te

CALCULATING THE SPEED OF THE FLUID THAT FLOWS AROUND A SUBMERGED MOTOR AND SIZING OF THE COOLING SLEEVE

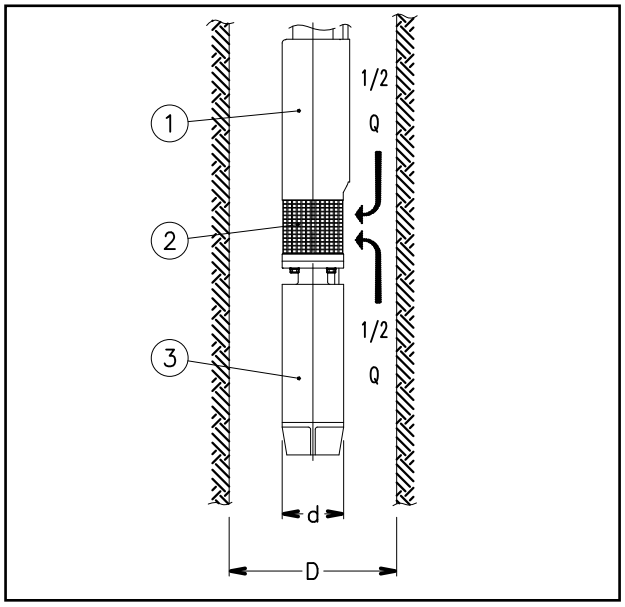

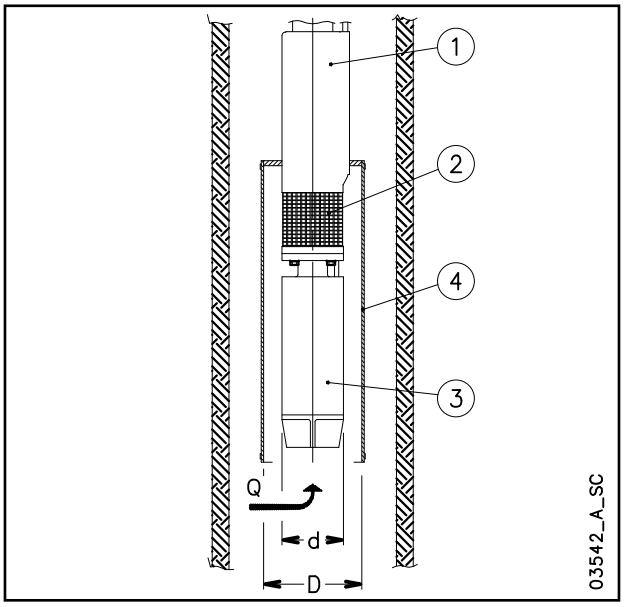

The following formula is used to verify whether the speed of the fluid that flows around the motor of a submersible pump is high enough to guarantee the proper cooling of the motor:

$$v = \frac{\frac{Q}{2}}{\pi \cdot (\frac{D^2}{4} - \frac{d^2}{4})}$$

Where:
- **-Q** in [m³/s] is the operating flow rate of the electric pump; only half of this flow is taken into account, because the fluid which is sucked into the area of the filter (2), comes from the motor side (3) as well as from the pump side (1);
- **-D** in [m] is the diameter of the well;
- **-d** in [m] is the diameter of the motor (3);
- **-v** in [m/s] is the calculated speed of the fluid that flows around the motor.

Now, compare the speed thus calculated (v) with the minimum speed required for correct cooling of the motor (v_m): if $v \geq v_m$ it means that the motor is properly cooled, if $v < v_m$ will be necessary to mount a cooling sleeve (4).

Example:
An electric pump OZ630/12
(motor diameter d = 0.144 m) operates in an 8" well (well diameter D = 0.203 m)
with flow rateQ = 20 m³/h = 0.0055 m³/s.
Speed of fluid v = (0.0055/2) / {π·[(0.203)²/4 – (0.144)²/4]} = 0.17 m/s.
The minimum speed required for proper motor cooling is v_m = 0.20 m/s.
Because $v < v_m$, it will be necessary to mount a cooling sleeve.

The following formula is used to determine the maximum diameter of a cooling sleeve to be mounted on a submersible motor:

$$D = \sqrt{4 \cdot \left(\frac{Q}{v \cdot \pi} + \frac{d^2}{4} \right)}$$

Where:
- **-Q** in [m³/s] is the operating flow rate of the electric pump; the entire flow is taken into account because the fluid comes from the motor side (3) only;
- **-D** in [m] corresponds to the diameter of the cooling sleeve (4);
- **-d** in [m] corresponds to the diameter of the motors(3);
- **-v_m** in [m/s] is the minimum speed of the fluid that flows around the motor.

If the electric pump operates at different flow rate, the minimum flow rate must be taken into account for calculating the diameter of the cooling sleeve.

Example:
A motor coupled to the electric pump OZ615/24 (motor diameter d = 0.144 m), which operates with flow rate Q = 15 m³/h = 0.0042 m³/s,
requires a minimum speed of the fluid of
v_m = 0.20 m/s.
Cooling sleeve diameter D = {4·[(0.0042/(0.2·π)+(0.144)²/4] }$^{0.5}$ = 0.217 m.

ASYNCHRONOUS MOTOR STARTING SYSTEMS

Direct

Suitable for low-power motors.
The starting current (Is) is much higher than the rated current (In).
Starting current Is = In x 4 ÷ 8
Starting torque Ts = Tn x 2 ÷ 3

Indirect

• Star/Delta

The starting current (Is) is three times less than the direct starting current.
Starting current Is = In x 1.3 ÷ 2.7
Starting torque Ts = Tn x 0.7 ÷ 1
In the star to delta changeover phase (approx. 70 ms) the motor is not supplied and tends to reduce its rotation speed.
In the case of submersible electric pumps with power above 10 HP, the modest mass of the rotor causes a slowdown at changeover, so that the initial Star supply phase is rendered partially useless.
In such cases we recommend using impedance panels or an autotransformer.

• Impedances

The motor is started with a voltage which is lower than the rated one, and which is obtained by means of impedances.
The Lowara panels use impedances which cut down to 70% the starting voltage.
The switch to the rated voltage takes place without any interruptions of the power supply.

Rated voltage Un = 400 V
Starting voltage Us = Un x 0,7 = 280 V

Starting current

$$Is = In \times 4 \div 8 \times \left(\frac{Us}{Un}\right) = In \times 3 \div 6$$

Starting torque

$$Ts = Tn \times 2 \div 3 \times \left(\frac{Us}{Un}\right)^2 = Tn \times 1 \div 1{,}5$$

Autotransformer

The pump is started with a voltage which is lower than the rated one.
The Lowara panels use an autotransformer with a voltage that is 70% the value of the line voltage.
The switch to the rated voltage occurs without any interruptions of the power supply.
Rated voltage Un = 400 V

Starting current

$$Is = In \times 4 \div 8 \times \left(\frac{Us}{Un}\right) = In \times 3 \div 6$$

Starting torque

$$Ts = Tn \times 2 \div 3 \times \left(\frac{Us}{Un}\right)^2 = Tn \times 1 \div 1{,}5$$

DIAGRAM OF STARTING INPUTS

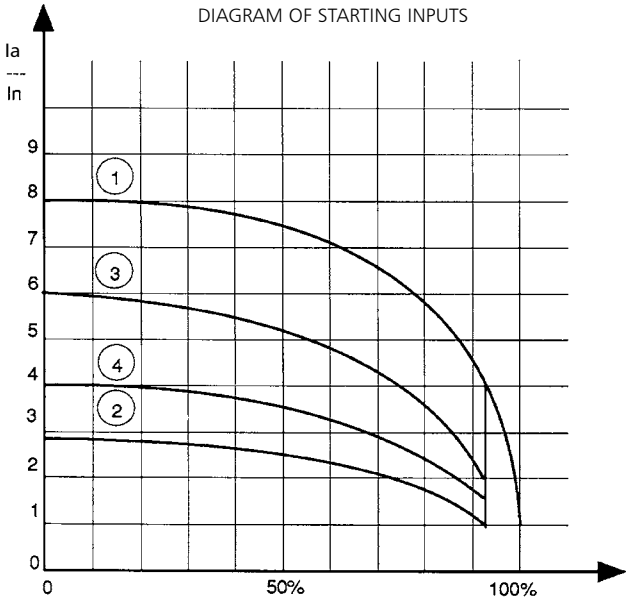

1 = Direct
2 = Star-Delta
3 = Impedances
4 = Autotransformer

WATER REQUIREMENTS IN CIVIL USERS

Determination of the water requirement depends on the type of users and contemporaneity factor.
The calculation may be subject to regulations, standards or customs that may vary from country to country.
The calculation method shown below is an example based on practical experience, designed to provide a reference value and not a substitutefor detailed analytical calculation.

Water requirements in condominiums.

The **consumption table** shows the maximum values for each delivery point, depending on the plumbing amenities.

MAXIMUM CONSUMPTION FOR EACH DELIVERY POINT

TYPE	CONSUMPTION (l/min)
Sink	9
Dishwasher	10
Washing machine	12
Shower	12
Bathtub	15
Washbasin	6
Bidet	6
Flush tank WC	6
Controlled flushing system WC	90

The **sum of the water consumption values** of each delivery point determines the maximum theoretical requirement, which must be reduced according to the **contemporaneity coefficient,** because in actual fact the delivery points are never used all together.

$$f = \frac{1}{\sqrt{(0{,}857 \times Nr \times Na)}}$$ Coefficient for apartments with one bathroom and flush tank WC

$$f = \frac{1}{\sqrt{(0{,}857 \times Nr \times Na)}}$$ Coefficient for apartments with one bathroom and controlled flushing system WC

$$f = \frac{1{,}03}{\sqrt{(0{,}545 \times Nr \times Na)}}$$ Coefficient for apartments with two bathrooms and flush tank WC

$$f = \frac{0{,}8}{\sqrt{(0{,}727 \times Nr \times Na)}}$$ Coefficient for apartments with two bathrooms and controlled flushing system WC

f= coefficient; Nr= number of delivery points; Na= number of apartments

The **table of water requirements in civil users** shows the maximum contemporaneity flow-rate values based on the **number of apartments** and the type of WC for apartments with one bathroom and two bathrooms. As regards apartments with one bathroom, 7 drawing points have been taken into consideration, while 11 points have been considered for apartments with two bathrooms. If the number of drawing points or apartments is different, use the formulas to **calculate** the requirement.

TABLE OF WATER REQUIREMENTS IN CIVIL USERS

NUMBER OF APARTMENTS	WITH FLUSH TANK WC		WITH CONTROLLED FLUSHING SYSTEM WC	
	1	2	1	2
	FLOW RATE (l/min)			
1	32	40	60	79
2	45	56	85	111
3	55	68	105	136
4	63	79	121	157
5	71	88	135	176
6	78	97	148	193
7	84	105	160	208
8	90	112	171	223
9	95	119	181	236
10	100	125	191	249
11	105	131	200	261
12	110	137	209	273
13	114	143	218	284
14	119	148	226	295
15	123	153	234	305
16	127	158	242	315
17	131	163	249	325
18	134	168	256	334
19	138	172	263	343
20	142	177	270	352
21	145	181	277	361
22	149	185	283	369
23	152	190	290	378
24	155	194	296	386
25	158	198	302	394
26	162	202	308	401
27	165	205	314	409
28	168	209	320	417
29	171	213	325	424
30	174	217	331	431
35	187	234	357	466
40	200	250	382	498
45	213	265	405	528
50	224	280	427	557
55	235	293	448	584
60	245	306	468	610
65	255	319	487	635
70	265	331	506	659
75	274	342	523	682
80	283	354	540	704
85	292	364	557	726
90	301	375	573	747
95	309	385	589	767
100	317	395	604	787
120	347	433	662	863
140	375	468	715	932
160	401	500	764	996
180	425	530	811	1056
200	448	559	854	1114

For seaside resorts, a flow rate increased by at least 20% must be considered.

G-at-fi-en_a_th

WATER REQUIREMENTS FOR COMMUNITY BUILDINGS

The requirements of buildings intended for specific uses, such as **offices, residential units, hotels, department stores, nursing homes** and so on, are different from those of condominiums, and both their global daily water consumption and the maximum contemporaneity flow rate are usually greater.
The **diagram of water requirements for community buildings** shows the maximum contemporaneity flow rate of some types of communities, for guidance.
These requirements must be determined case by case with the utmost accuracy, using analytical calculation methods,according to particular needs and local provisions.

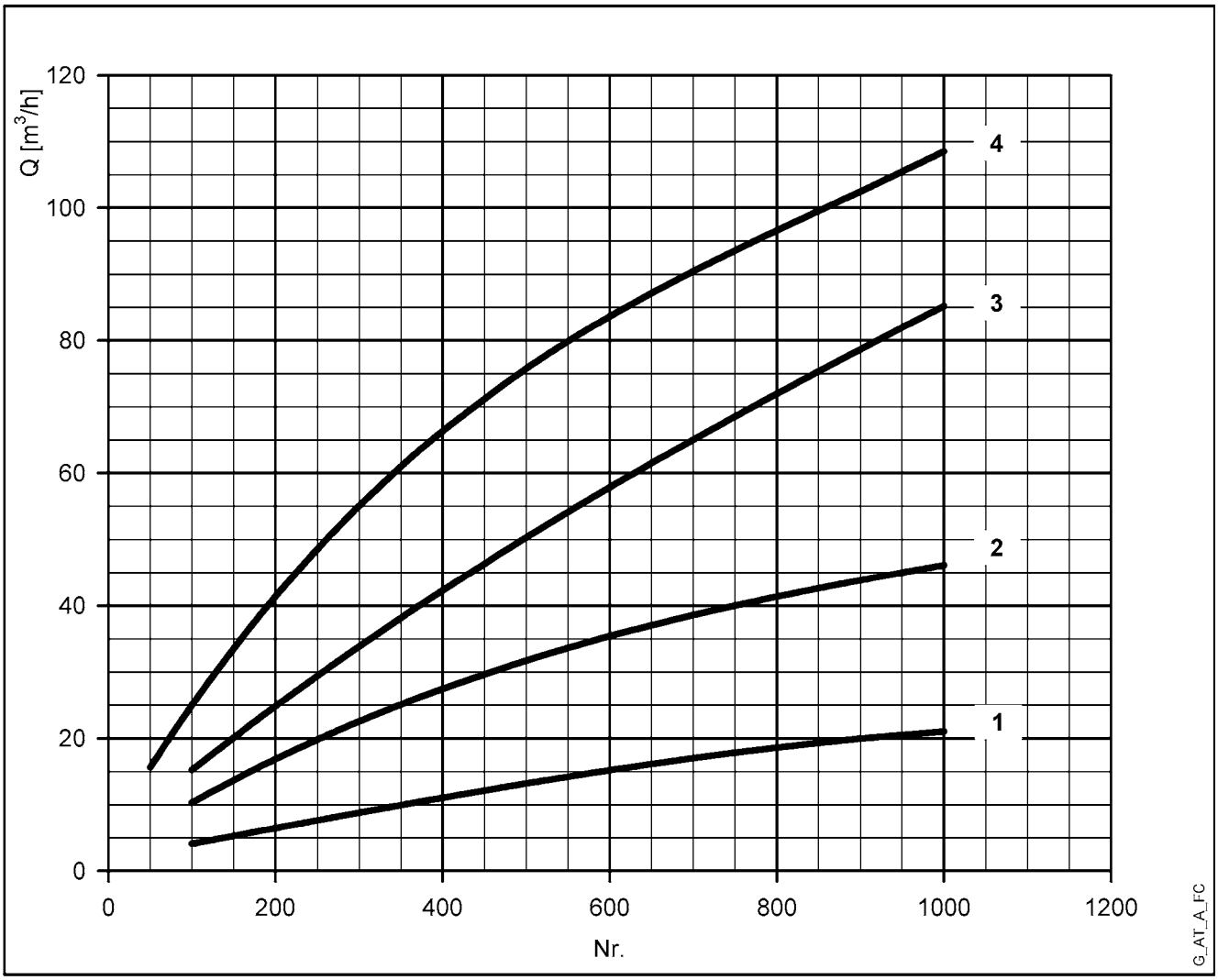

For seaside resorts, the flow rate must be increased by at least 20%.
1= Offices (N. of people)
2= Department stores (N. of people)
3= Nursing homes (N. of beds)
4= Hotels, residences (N. of beds)

NPSH

The minimum operating values that can be reached at the pump suction end are limited by the onset of cavitation.

Cavitation is the formation of vapour-filled cavities within liquids where the pressure is locally reduced to a critical value, or where the local pressure is equal to, or just below the vapour pressure of the liquid.

The vapour-filled cavities flow with the current and when they reach a higher pressure area the vapour contained in the cavities condenses. The cavities collide, generating pressure waves that are transmitted to the walls. These, being subjected to stress cycles, gradually become deformed and yield due to fatigue. This phenomenon, characterized by a metallic noise produced by the hammering on the pipe walls, is called incipient cavitation.

The damage caused by cavitation may be magnified by electrochemical corrosion and a local rise in temperature due to the plastic deformation of the walls. The materials that offer the highest resistance to heat and corrosion are alloy steels, especially austenitic steel. The conditions that trigger cavitation may be assessed by calculating the total net suction head, referred to in technical literature with the acronym NPSH (Net Positive Suction Head).

The NPSH represents the total energy (expressed in m.) of the liquid measured at suction under conditions of incipient cavitation, excluding the vapour pressure (expressed in m.) that the liquid has at the pump inlet.

To find the static height hz at which to install the machine under safe conditions, the following formula must be verified:

hp + hz ≥ (NPSHr + 0.5) + hf + hpv ①

where:

hp is the absolute pressure applied to the free liquid surface in the suction tank, expressed in m. of liquid; hp is the quotient between the barometric pressure and the specific weight of the liquid.

hz is the suction lift between the pump axis and the free liquid surface in the suction tank, expressed in m.; hz is negative when the liquid level is lower than the pump axis.

hf is the flow resistance in the suction line and its accessories, such as: fittings, foot valve, gate valve, elbows, etc.

hpv is the vapour pressure of the liquid at the operating temperature, expressed in m. of liquid. hpv is the quotient between the Pv vapour pressure and the liquid's specific weight.

0,5 is the safety factor.

The maximum possible suction head for installation depends on the value of the atmospheric pressure (i.e. the elevation above sea level at which the pump is installed) and the temperature of the liquid.

To help the user, with reference to water temperature (4° C) and to the elevation above sea level, the following tables show the drop in hydraulic pressure head in relation to the elevation above sea level, and the suction loss in relation to temperature.

Water temperature (°C)	20	40	60	80	90	110	120
Suction loss (m)	0,2	0,7	2,0	5,0	7,4	15,4	21,5

Elevation above sea level (m)	500	1000	1500	2000	2500	3000
Suction loss (m)	0,55	1,1	1,65	2,2	2,75	3,3

Friction loss is shown in the tables at pages 117-118 of this catalogue. To reduce it to a minimum, especially in cases of high suction head (over 4-5 m.) or within the operating limits with high flow rates, we recommend using a suction line having a larger diameter than that of the pump's suction port.
It is always a good idea to position the pump as close as possible to the liquid to be pumped.

Make the following calculation:

Liquid: water at ~15°C γ = 1 kg/dm^3
Flow rate required: 30 m^3/h
Head for required delivery: 43 m.
Suction lift: 3,5 m.
The selection is an FHE 40-200/75 pump whose NPSH required value is, at 30 m^3/h, di 2,5 m.

For water at 15 °C

hp = Pa / γ = 10,33m, hpv = Pv / γ = 0,174m (0,01701 bar)

The Hf flow resistance in the suction line with foot valves is ~ 1,2 m.
By substituting the parameters in formula ① with the numeric values above, we have:

10,33 + (-3,5) ≥ (2,5 + 0,5) + 1,2 + 0,17

from which we have: 6,8 > 4,4

The relation is therefore verified.

TECHNICAL APPENDIX VAPOUR PRESSURE ps VAPOUR PRESSURE AND ρ DENSITY OF WATER TABLE

t	T	ps	ρ
°C	K	bar	kg/dm^3
0	273,15	0,00611	0,9998
1	274,15	0,00657	0,9999
2	275,15	0,00706	0,9999
3	276,15	0,00758	0,9999
4	277,15	0,00813	1,0000
5	278,15	0,00872	1,0000
6	279,15	0,00935	1,0000
7	280,15	0,01001	0,9999
8	281,15	0,01072	0,9999
9	282,15	0,01147	0,9998
10	283,15	0,01227	0,9997
11	284,15	0,01312	0,9997
12	285,15	0,01401	0,9996
13	286,15	0,01497	0,9994
14	287,15	0,01597	0,9993
15	288,15	0,01704	0,9992
16	289,15	0,01817	0,9990
17	290,15	0,01936	0,9988
18	291,15	0,02062	0,9987
19	292,15	0,02196	0,9985
20	293,15	0,02337	0,9983
21	294,15	0,24850	0,9981
22	295,15	0,02642	0,9978
23	296,15	0,02808	0,9976
24	297,15	0,02982	0,9974
25	298,15	0,03166	0,9971
26	299,15	0,03360	0,9968
27	300,15	0,03564	0,9966
28	301,15	0,03778	0,9963
29	302,15	0,04004	0,9960
30	303,15	0,04241	0,9957
31	304,15	0,04491	0,9954
32	305,15	0,04753	0,9951
33	306,15	0,05029	0,9947
34	307,15	0,05318	0,9944
35	308,15	0,05622	0,9940
36	309,15	0,05940	0,9937
37	310,15	0,06274	0,9933
38	311,15	0,06624	0,9930
39	312,15	0,06991	0,9927
40	313,15	0,07375	0,9923
41	314,15	0,07777	0,9919
42	315,15	0,08198	0,9915
43	316,15	0,09639	0,9911
44	317,15	0,09100	0,9907
45	318,15	0,09582	0,9902
46	319,15	0,10086	0,9898
47	320,15	0,10612	0,9894
48	321,15	0,11162	0,9889
49	322,15	0,11736	0,9884
50	323,15	0,12335	0,9880
51	324,15	0,12961	0,9876
52	325,15	0,13613	0,9871
53	326,15	0,14293	0,9862
54	327,15	0,15002	0,9862

t	T	ps	ρ
°C	K	bar	kg/dm^3
55	328,15	0,15741	0,9857
56	329,15	0,16511	0,9852
57	330,15	0,17313	0,9846
58	331,15	0,18147	0,9842
59	332,15	0,19016	0,9837
60	333,15	0,1992	0,9832
61	334,15	0,2086	0,9826
62	335,15	0,2184	0,9821
63	336,15	0,2286	0,9816
64	337,15	0,2391	0,9811
65	338,15	0,2501	0,9805
66	339,15	0,2615	0,9799
67	340,15	0,2733	0,9793
68	341,15	0,2856	0,9788
69	342,15	0,2984	0,9782
70	343,15	0,3116	0,9777
71	344,15	0,3253	0,9770
72	345,15	0,3396	0,9765
73	346,15	0,3543	0,9760
74	347,15	0,3696	0,9753
75	348,15	0,3855	0,9748
76	349,15	0,4019	0,9741
77	350,15	0,4189	0,9735
78	351,15	0,4365	0,9729
79	352,15	0,4547	0,9723
80	353,15	0,4736	0,9716
81	354,15	0,4931	0,9710
82	355,15	0,5133	0,9704
83	356,15	0,5342	0,9697
84	357,15	0,5557	0,9691
85	358,15	0,5780	0,9684
86	359,15	0,6011	0,9678
87	360,15	0,6249	0,9671
88	361,15	0,6495	0,9665
89	362,15	0,6749	0,9658
90	363,15	0,7011	0,9652
91	364,15	0,7281	0,9644
92	365,15	0,7561	0,9638
93	366,15	0,7849	0,9630
94	367,15	0,8146	0,9624
95	368,15	0,8453	0,9616
96	369,15	0,8769	0,9610
97	370,15	0,9094	0,9602
98	371,15	0,9430	0,9596
99	372,15	0,9776	0,9586
100	373,15	1,0133	0,9581
102	375,15	1,0878	0,9567
104	377,15	1,1668	0,9552
106	379,15	1,2504	0,9537
108	381,15	1,3390	0,9522
110	383,15	1,4327	0,9507
112	385,15	1,5316	0,9491
114	387,15	1,6362	0,9476
116	389,15	1,7465	0,9460
118	391,15	1,8628	0,9445

t	T	ps	ρ
°C	K	bar	kg/dm^3
120	393,15	1,9854	0,9429
122	395,15	2,1145	0,9412
124	397,15	2,2504	0,9396
126	399,15	2,3933	0,9379
128	401,15	2,5435	0,9362
130	403,15	2,7013	0,9346
132	405,15	2,867	0,9328
134	407,15	3,041	0,9311
136	409,15	3,223	0,9294
138	411,15	3,414	0,9276
140	413,15	3,614	0,9258
145	418,15	4,155	0,9214
155	428,15	5,433	0,9121
160	433,15	6,181	0,9073
165	438,15	7,008	0,9024
170	433,15	7,920	0,8973
175	448,15	8,924	0,8921
180	453,15	10,027	0,8869
185	458,15	11,233	0,8815
190	463,15	12,551	0,8760
195	468,15	13,987	0,8704
200	473,15	15,550	0,8647
205	478,15	17,243	0,8588
210	483,15	19,077	0,8528
215	488,15	21,060	0,8467
220	493,15	23,198	0,8403
225	498,15	25,501	0,8339
230	503,15	27,976	0,8273
235	508,15	30,632	0,8205
240	513,15	33,478	0,8136
245	518,15	36,523	0,8065
250	523,15	39,776	0,7992
255	528,15	43,246	0,7916
260	533,15	46,943	0,7839
265	538,15	50,877	0,7759
270	543,15	55,058	0,7678
275	548,15	59,496	0,7593
280	553,15	64,202	0,7505
285	558,15	69,186	0,7415
290	563,15	74,461	0,7321
295	568,15	80,037	0,7223
300	573,15	85,927	0,7122
305	578,15	92,144	0,7017
310	583,15	98,70	0,6906
315	588,15	105,61	0,6791
320	593,15	112,89	0,6669
325	598,15	120,56	0,6541
330	603,15	128,63	0,6404
340	613,15	146,05	0,6102
350	623,15	165,35	0,5743
360	633,15	186,75	0,5275
370	643,15	210,54	0,4518
374,15	647,30	221,20	0,3154

G-at_npsh_b_sc

TABLE OF FLOW RESISTANCE IN 100 m OF STRAIGHT CAST IRON PIPELINE (HAZEN-WILLIAMS FORMULA C=100)

FLOW RATE			NOMINAL DIAMETER in mm and inches																
m^3/h	l/min		15	20	25	32	40	50	65	80	100	125	150	175	200	250	300	350	400
			1/2"	3/4"	1"	1 1/4"	1 1/2"	2	2 1/2"	3"	4"	5"	6"	7"	8"	10"	12"	14"	16"
0,6	10	v	0,94	0,53	0,34	0,21	0,13												
		hr	16	3,94	1,33	0,40	0,13												
0,9	15	v	1,42	0,80	0,51	0,31	0,20												
		hr	33,9	8,35	2,82	0,85	0,29												
1,2	20	v	1,89	1,06	0,68	0,41	0,27	0,17											
		hr	57,7	14,21	4,79	1,44	0,49	0,16											
1,5	25	v	2,36	1,33	0,85	0,52	0,33	0,21											
		hr	87,2	21,5	7,24	2,18	0,73	0,25											
1,8	30	v	2,83	1,59	1,02	0,62	0,40	0,25											
		hr	122	30,1	10,1	3,05	1,03	0,35											
2,1	35	v	3,30	1,86	1,19	0,73	0,46	0,30											
		hr	162	40,0	13,5	4,06	1,37	0,46											
2,4	40	v		2,12	1,36	0,83	0,53	0,34	0,20										
		hr		51,2	17,3	5,19	1,75	0,59	0,16										
3	50	v		2,65	1,70	1,04	0,66	0,42	0,25										
		hr		77,4	26,1	7,85	2,65	0,89	0,25										
3,6	60	v		3,18	2,04	1,24	0,80	0,51	0,30										
		hr		108	36,6	11,0	3,71	1,25	0,35										
4,2	70	v		3,72	2,38	1,45	0,93	0,59	0,35										
		hr		144	48,7	14,6	4,93	1,66	0,46										
4,8	80	v		4,25	2,72	1,66	1,06	0,68	0,40										
		hr		185	62,3	18,7	6,32	2,13	0,59										
5,4	90	v			3,06	1,87	1,19	0,76	0,45	0,30									
		hr			77,5	23,3	7,85	2,65	0,74	0,27									
6	100	v			3,40	2,07	1,33	0,85	0,50	0,33									
		hr			94,1	28,3	9,54	3,22	0,90	0,33									
7,5	125	v			4,25	2,59	1,66	1,06	0,63	0,41									
		hr			142	42,8	14,4	4,86	1,36	0,49									
9	150	v				3,11	1,99	1,27	0,75	0,50	0,32								
		hr				59,9	20,2	6,82	1,90	0,69	0,23								
10,5	175	v				3,63	2,32	1,49	0,88	0,58	0,37								
		hr				79,7	26,9	9,07	2,53	0,92	0,31								
12	200	v				4,15	2,65	1,70	1,01	0,66	0,42								
		hr				102	34,4	11,6	3,23	1,18	0,40								
15	250	v				5,18	3,32	2,12	1,26	0,83	0,53	0,34							
		hr				154	52,0	17,5	4,89	1,78	0,60	0,20							
18	300	v					3,98	2,55	1,51	1,00	0,64	0,41							
		hr					72,8	24,6	6,85	2,49	0,84	0,28							
24	400	v					5,31	3,40	2,01	1,33	0,85	0,54	0,38						
		hr					124	41,8	11,66	4,24	1,43	0,48	0,20						
30	500	v					6,63	4,25	2,51	1,66	1,06	0,68	0,47						
		hr					187	63,2	17,6	6,41	2,16	0,73	0,30						
36	600	v						5,10	3,02	1,99	1,27	0,82	0,57	0,42					
		hr						88,6	24,7	8,98	3,03	1,02	0,42	0,20					
42	700	v						5,94	3,52	2,32	1,49	0,95	0,66	0,49					
		hr						118	32,8	11,9	4,03	1,36	0,56	0,26					
48	800	v						6,79	4,02	2,65	1,70	1,09	0,75	0,55					
		hr						151	42,0	15,3	5,16	1,74	0,72	0,34					
54	900	v						7,64	4,52	2,99	1,91	1,22	0,85	0,62					
		hr						188	52,3	19,0	6,41	2,16	0,89	0,42					
60	1000	v							5,03	3,32	2,12	1,36	0,94	0,69	0,53				
		hr							63,5	23,1	7,79	2,63	1,08	0,51	0,27				
75	1250	v							6,28	4,15	2,65	1,70	1,18	0,87	0,66				
		hr							96,0	34,9	11,8	3,97	1,63	0,77	0,40				
90	1500	v							7,54	4,98	3,18	2,04	1,42	1,04	0,80				
		hr							134	48,9	16,5	5,57	2,29	1,08	0,56				
105	1750	v							8,79	5,81	3,72	2,38	1,65	1,21	0,93				
		hr							179	65,1	21,9	7,40	3,05	1,44	0,75				
120	2000	v								6,63	4,25	2,72	1,89	1,39	1,06	0,68			
		hr								83,3	28,1	9,48	3,90	1,84	0,96	0,32			
150	2500	v								8,29	5,31	3,40	2,36	1,73	1,33	0,85			
		hr								126	42,5	14,3	5,89	2,78	1,45	0,49			
180	3000	v									6,37	4,08	2,83	2,08	1,59	1,02	0,71		
		hr									59,5	20,1	8,26	3,90	2,03	0,69	0,28		
210	3500	v									7,43	4,76	3,30	2,43	1,86	1,19	0,83		
		hr									79,1	26,7	11,0	5,18	2,71	0,91	0,38		
240	4000	v									8,49	5,44	3,77	2,77	2,12	1,36	0,94		
		hr									101	34,2	14,1	6,64	3,46	1,17	0,48		
300	5000	v										6,79	4,72	3,47	2,65	1,70	1,18		
		hr										51,6	21,2	10,0	5,23	1,77	0,73		
360	6000	v										8,15	5,66	4,16	3,18	2,04	1,42		
		hr										72,3	29,8	14,1	7,33	2,47	1,02		
420	7000	v											6,61	4,85	3,72	2,38	1,65	1,21	
		hr											39,6	18,7	9,75	3,29	1,35	0,64	
480	8000	v											7,55	5,55	4,25	2,72	1,89	1,39	
		hr											50,7	23,9	12,49	4,21	1,73	0,82	
540	9000	v											8,49	6,24	4,78	3,06	2,12	1,56	1,19
		hr											63,0	29,8	15,5	5,24	2,16	1,02	0,53
600	10000	v												6,93	5,31	3,40	2,36	1,73	1,33
		hr												36,2	18,9	6,36	2,62	1,24	0,65

The hr values must be multiplied by:
0,71 for galvanized or painted steel pipes
0,54 for stainless steel or copper pipes
0,47 for PVC or PE pipes

G-at-pct-en_a_th

hr = flow resistance for 100 m of straight pipeline (m)
V = water speed (m/s)

FLOW RESISTANCE

TABLE OF FLOW RESISTANCE IN BENDS, VALVES AND GATES

The flow resistance is calculated using the equivalent pipeline length method according to the table below:

ACCESSORY TYPE	DN											
	25	32	40	50	65	80	100	125	150	200	250	300
	Equivalent pipeline length (m)											
45° bend	0,2	0,2	0,4	0,4	0,6	0,6	0,9	1,1	1,5	1,9	2,4	2,8
90° bend	0,4	0,6	0,9	1,1	1,3	1,5	2,1	2,6	3,0	3,9	4,7	5,8
90° smooth bend	0,4	0,4	0,4	0,6	0,9	1,1	1,3	1,7	1,9	2,8	3,4	3,9
Union tee or cross	1,1	1,3	1,7	2,1	2,6	3,2	4,3	5,3	6,4	7,5	10,7	12,8
Gate valve	-	-	-	0,2	0,2	0,2	0,4	0,4	0,6	0,9	1,1	1,3
Foot check valve	1,1	1,5	1,9	2,4	3,0	3,4	4,7	5,9	7,4	9,6	11,8	13,9
Non return valve	1,1	1,5	1,9	2,4	3,0	3,4	4,7	5,9	7,4	9,6	11,8	13,9

G-a-pcv-en_b_th

The table is valid for the Hazen Williams coefficient C = 100 (cast iron pipework). For steel pipework, multiply the values by 1.41. For stainless steel, copper and coated cast iron pipework, multiply the values by 1.85.
When the **equivalent pipeline length** has been determined, the flow resistance is obtained from the table of flow resistance.
The values given are guideline values which are bound to vary slightly according to the model, especially for gate valves and non-return valves, for which it is a good idea to check the values supplied by the manufacturers.

VOLUMETRIC CAPACITY

Litres per minute l/min	Cubic metres per hour m^3/h	Cubic feet per hour ft^3/h	Cubic feet per minute ft^3/min	Imperial gallon per minute Imp. gal/min	U.S. gallon per minute US gal/min
1,0000	0,0600	2,1189	0,0353	0,2200	0,2642
16,6667	**1,0000**	35,3147	0,5886	3,6662	4,4029
0,4719	0,0283	**1,0000**	0,0167	0,1038	0,1247
28,3168	1,6990	60,0000	**1,0000**	6,2288	7,4805
4,5461	0,2728	9,6326	0,1605	**1,0000**	1,2009
3,7854	0,2271	8,0208	0,1337	0,8327	**1,0000**

PRESSURE AND HEAD

Newton per square metre N/m^2	kilo Pascal kPa	bar bar	Pound force per square inch psi	Metre of water m H_2O	Millimetre of mercury mm Hg
1,0000	0,0010	1×10^{-5}	$1,45 \times 10^{-4}$	$1,02 \times 10^{-4}$	0,0075
1 000,0000	**1,0000**	0,0100	0,1450	0,1020	7,5006
1×10^{5}	100,0000	**1,0000**	14,5038	10,1972	750,0638
6 894,7570	6,8948	0,0689	**1,0000**	0,7031	51,7151
9 806,6500	9,8067	0,0981	1,4223	**1,0000**	73,5561
133,3220	0,1333	0,0013	0,0193	0,0136	**1,0000**

LENGTH

Millimetre mm	Centimetre cm	Metre m	Inch in	Foot ft	Yard yd
1,0000	0,1000	0,0010	0,0394	0,0033	0,0011
10,0000	**1,0000**	0,0100	0,3937	0,0328	0,0109
1 000,0000	100,0000	**1,0000**	39,3701	3,2808	1,0936
25,4000	2,5400	0,0254	**1,0000**	0,0833	0,0278
304,8000	30,4800	0,3048	12,0000	**1,0000**	0,3333
914,4000	91,4400	0,9144	36,0000	3,0000	**1,0000**

VOLUME

Cubic metre m^3	Litre L	Millilitre ml	Imperial gallon imp. gal.	U.S. gallon US gal.	Cubic foot ft^3
1,0000	1 000,0000	1×10^{6}	219,9694	264,1720	35,3147
0,0010	**1,0000**	1 000,0000	0,2200	0,2642	0,0353
1×10^{-6}	0,0010	**1,0000**	$2,2 \times 10^{-4}$	$2,642 \times 10^{-4}$	$3,53 \times 10^{-5}$
0,0045	4,5461	4 546,0870	**1,0000**	1,2009	0,1605
0,0038	3,7854	3 785,4120	0,8327	**1,0000**	0,1337
0,0283	28,3168	28 316,8466	6,2288	7,4805	**1,0000**

TEMPERATURE

Water	Kelvin K	Celsius °C	Fahrenheit °F	
icing	273,1500	0,0000	32,0000	$°F = °C \times \frac{9}{5} + 32$
boiling	373,1500	100,0000	212,0000	$°C = (°F - 32) \times \frac{5}{9}$

G-at_pp-en_b_sc

FURTHER PRODUCT SELECTION AND DOCUMENTATION

Xylect™

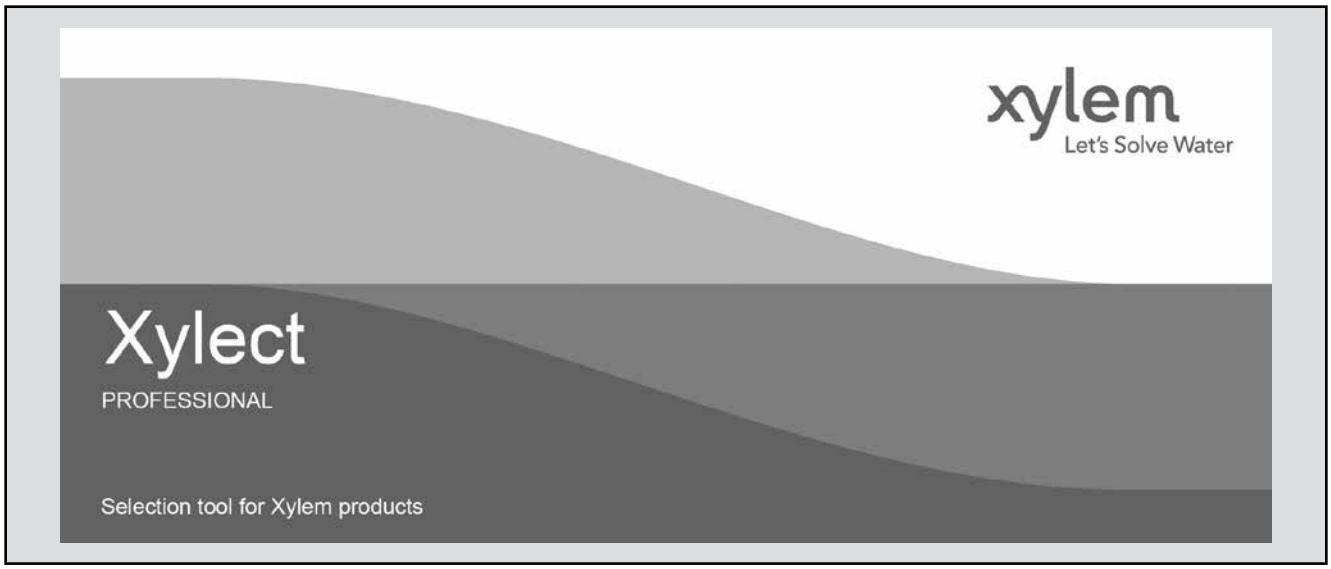

Xylect™ is pump solution selection software with an extensive online database of product information across the entire Lowara, and Vogel range of pumps and related products, with multiple search options and helpful project management facilities. The system holds up-to-date product information on thousands of products and accessories.

The possibility to search by applications and the detailed information output given makes it easy to make the optimal selection without having detailed knowledge about the Lowara and Vogel products.

The search can be made by:

- Application
- Product type
- Duty point

Xylect™ gives a detailed output:

- List with search results
- Performance curves (flow, head, power, efficiency, NPSH)
- Motor data
- Dimensional drawings
- Options
- Data sheet printouts
- Document downloads incl dxf files

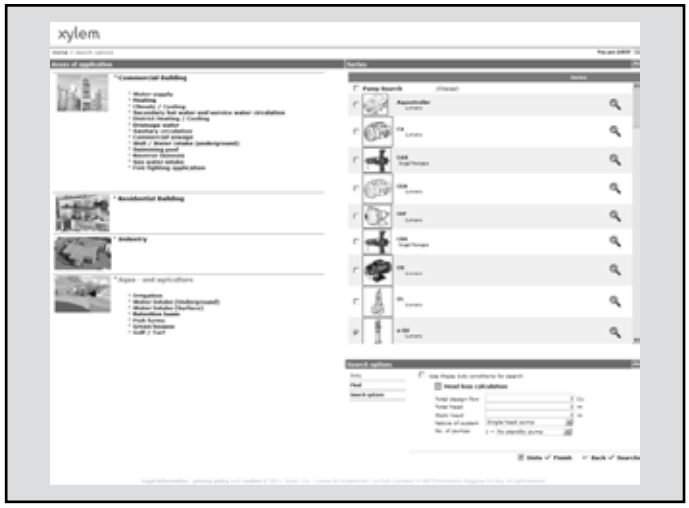

The search by application guides users not familiar with the product range to the right choice.

FURTHER PRODUCT SELECTION AND DOCUMENTATION

Xylect™

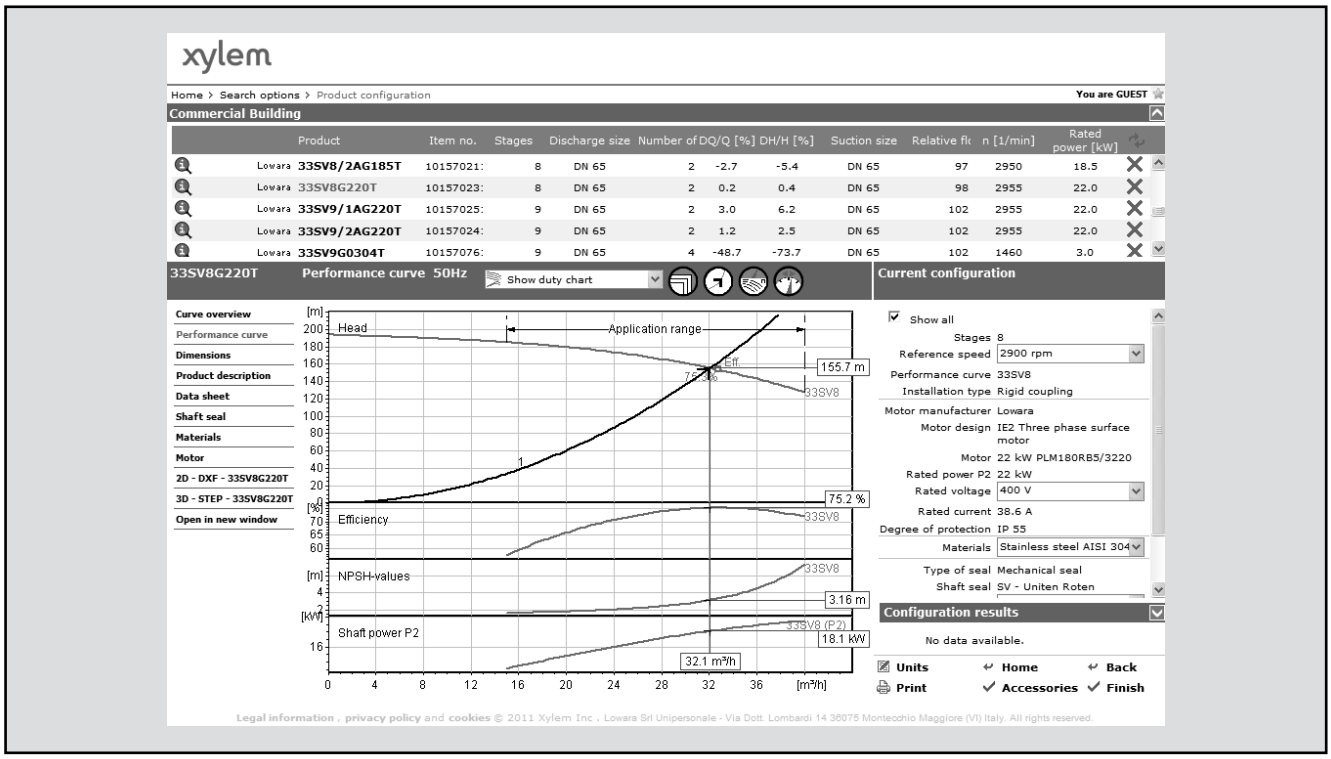

The detailed output makes it easy to select the optimal pump from the given alternatives.

The best way to work with Xylect is to create a personal account. This makes it possible to:

- Set own standard units
- Create and save projects
- Share projects with other Xylect users

Every registered user has a proper space, where all projects are saved.

For more information about Xylect please contact our sales network or visit www.xylect.com.

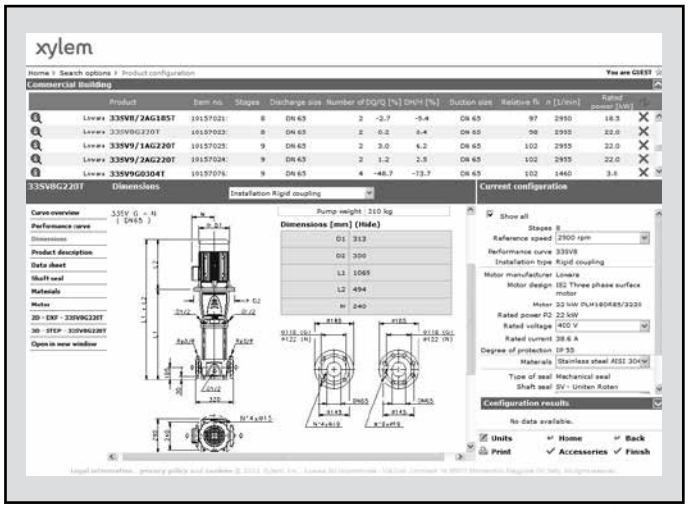

Dimensional drawings appear on the screen and can be downloaded in dxf format.

Xylem |ˈzīləm|

1) The tissue in plants that brings water upward from the roots;
2) a leading global water technology company.

We're a global team unified in a common purpose: creating advanced technology solutions to the world's water challenges. Developing new technologies that will improve the way water is used, conserved, and reused in the future is central to our work. Our products and services move, treat, analyze, monitor and return water to the environment, in public utility, industrial, residential and commercial building services, and agricultural settings. With its October 2016 acquisition of Sensus, Xylem added smart metering, network technologies and advanced data analytics for water, gas and electric utilities to its portfolio of solutions. In more than 150 countries, we have strong, long-standing relationships with customers who know us for our powerful combination of leading product brands and applications expertise with a strong focus on developing comprehensive, sustainable solutions.

For more information on how Xylem can help you, go to xylem.com.

LOWARA

xylem
Let's Solve Water

For information and technical support
Xylem Service Italia Srl

Via Dottor Vittorio Lombardi 14
36075 - Montecchio Maggiore (VI) - Italy
Tel. (+39) 0444 707111
Fax (+39) 0444 491043
www.lowara.com