50/60 Hz

ecocirc XL and XLplus

HIGH EFFICIENCY WET ROTOR CIRCULATORS
FOR COMMERCIAL HEATING AND COOLING APPLICATIONS

ErP 2009/125/EC

PUMP TECH

LOWARA
a xylem brand

Cod. 191007251 Rev.M Ed. 09/2019

Lowara, ecocirc, Xylect are trademarks of Xylem Inc. or one of its subsidiaries.

CONTENTS

Introduction 4

Identification code 5

Product Range 6

Functions 8

Sectional drawings 16

Installation 18

Part numbers 22

Performance Range 24

Performance curves and Technical data 26

Accessories 77

Documentation 85

ecocirc XL – ecocirc XLplus

High efficiency circulators for commercial heating with electronically commutated permanent magnet technology.

PRODUCT DESCRIPTION

ecocirc XL and ecocirc XLplus circulation pumps are designed for circulating liquids in the following systems:

- Hot water heating systems
- Air conditioning and cooling systems
- Domestic hot water systems.

The pump can be also used for:

- Solar systems
- Geothermal systems.

DUTY RANGE

- Flow rate: up to 70 m^3/h for single-head pumps and up to 135 m^3/h for twin pumps
- Head: up to 18 m
- Maximum power consumption: 1560 [W]
- Temperature of pumped liquid: -10°C to +110°C
- Ambient temperature during operations: 0 to +40°C
- Maximum operating pressure: 10 bar (PN 10).

FEATURES

- Proportional pressure control
- Constant pressure control
- Constant speed
- Night Mode
- Constant temperature control (ecocirc XLplus only)
- Differential temperature control (ecocirc XLplus only)
- Additional operating modes for dual pumps (2 single head circulators or twin models) including parallel and alternate operations (ecocirc XLplus only)
- Dry run protection
- Air purge
- Plug for ecocirc XL and ecocirc XLplus 25-40(N), 25-60(N), 32-40(N) and 32-60(N)
- Reading and settings of the pump by digital display and human interface with push buttons
- Insulation shell for single head pumps systems for heating
- Integrated communication capabilities (Modbus and BacNet) for ecocirc XLplus.

BENEFITS

- Low power consumption. ecocirc XL and ecocirc XLplus are compliant to the ErP Directive.
- Easy to set-up
- User-friendly human interface with digital display
- Control panel with push buttons to change circulator status
- Operating status visualization
- Warning and alarm visualization
- Errors and working log history visualization (ecocirc XLplus only)
- Dry running detection
- Multi-pump functions
- External control and monitoring (ecocirc XLplus only)
- Module for wireless communication (ecocirc XLplus only).

IDENTIFICATION CODE

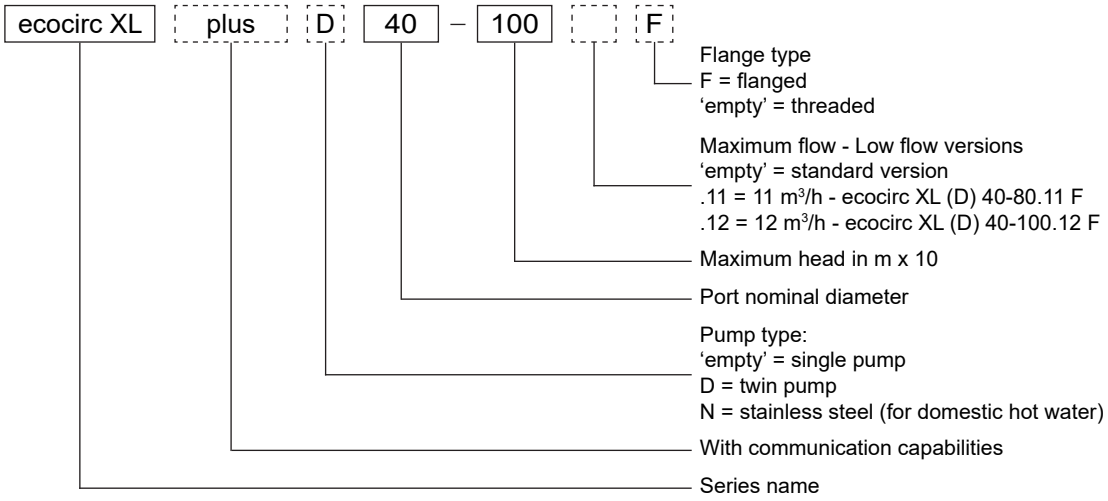

EXAMPLE: ecocirc XLplus D 40-100 F

High Efficiency electronic circulator ecocirc XL plus with communication capabilities, twin version, port nominal diameter 40, max head 10 m, flanged.

PUMP TYPE RATING PLATE

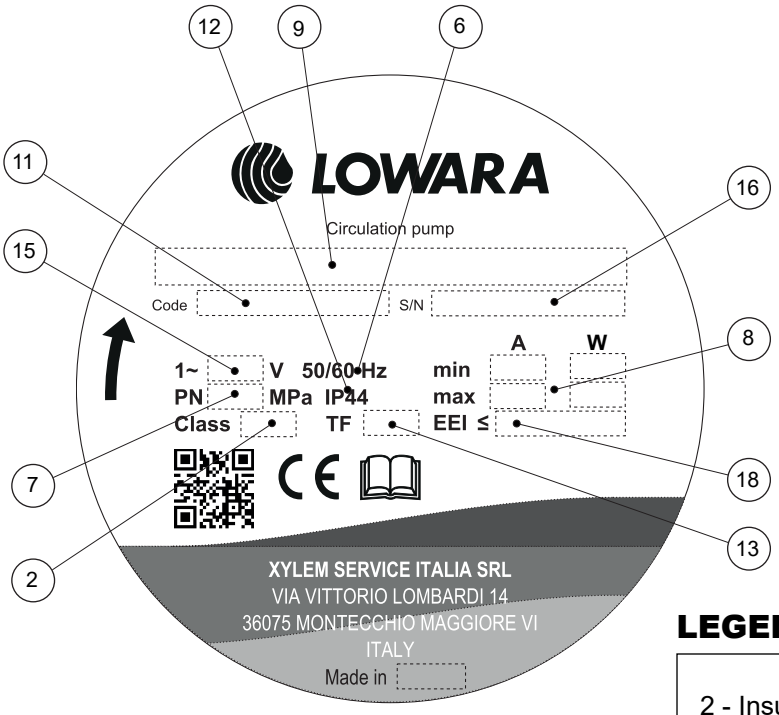

LEGEND

2 - Insulation class
6 - Frequency
7 - Maximum operating pressure
8 - Electric pump consumption
9 - Electric pump unit type
11 - Electric pump unit / pump part number
12 - Protection degree
13 - Maximum operating liquid temperature (EN 60335-2-51)
15 - Rated voltage range
16 - Serial number (date + progressive number)
18 - EEI index

ecocirc XL

Single-head Pump type	Threaded pipe connection						
	Port to port (mm)	Connection	PN 6/10	PN 6	PN 10	Electrical connection	Integrated communication capabilities
ecocirc XL 25-40 (N)	180	G 1 ½ – Rp 1	•			plug	no communication protocol
ecocirc XL 25-60 (N)	180	G 1 ½ – Rp 1	•			plug	no communication protocol
ecocirc XL 25-80	180	G 1 ½ – Rp 1	•			terminals	no communication protocol
ecocirc XL 25-100	180	G 1 ½ – Rp 1	•			terminals	no communication protocol
ecocirc XL 32-40 (N)	180	G 2 – Rp 1 ¼	•			plug	no communication protocol
ecocirc XL 32-60 (N)	180	G 2 – Rp 1 ¼	•			plug	no communication protocol
ecocirc XL 32-80 (N)	180	G 2 – Rp 1 ¼	•			terminals	no communication protocol
ecocirc XL 32-100 (N)	180	G 2 – Rp 1 ¼	•			terminals	no communication protocol

Single-head Pump type	Flanged connection						
	Port to port (mm)	Connection	PN 6/10	PN 6	PN 10	Electrical connection	Integrated communication capabilities
ecocirc XL 32-80 F	220	DN 32	•			terminals	no communication protocol
ecocirc XL 32-100 F	220	DN 32	•			terminals	no communication protocol
ecocirc XL 32-120 F (N)	220	DN 32	•			terminals	no communication protocol
ecocirc XL 40-80.11 F	220	DN 40	•			terminals	no communication protocol
ecocirc XL 40-80 F	220	DN 40	•			terminals	no communication protocol
ecocirc XL 40-100.12 F	220	DN 40	•			terminals	no communication protocol
ecocirc XL 40-100 F	220	DN 40	•			terminals	no communication protocol
ecocirc XL 40-120 F (N)	250	DN 40	•			terminals	no communication protocol
ecocirc XL 40-150 F	250	DN 40	•			terminals	no communication protocol
ecocirc XL 40-180 F	250	DN 40	•			terminals	no communication protocol
ecocirc XL 50-80 F (N)	240	DN 50	•			terminals	no communication protocol
ecocirc XL 50-100 F	280	DN 50	•			terminals	no communication protocol
ecocirc XL 50-120 F (N)	280	DN 50	•			terminals	no communication protocol
ecocirc XL 50-150 F	280	DN 50	•			terminals	no communication protocol
ecocirc XL 50-180 F	280	DN 50	•			terminals	no communication protocol
ecocirc XL 65-80 F (N)	340	DN 65	•			terminals	no communication protocol
ecocirc XL 65-120 F (N)	340	DN 65	•			terminals	no communication protocol
ecocirc XL 65-150 F	340	DN 65	•			terminals	no communication protocol
ecocirc XL 65-180 F	340	DN 65	•			terminals	no communication protocol
ecocirc XL 80-120 F	360	DN 80		•		terminals	no communication protocol
ecocirc XL 80-120 F	360	DN 80			•	terminals	no communication protocol
ecocirc XL 100-120 F	360	DN 100		•		terminals	no communication protocol
ecocirc XL 100-120 F	360	DN 100			•	terminals	no communication protocol

Twin-head Pump type	Threaded pipe connection						
	Port to port (mm)	Connection	PN 6/10	PN 6	PN 10	Electrical connection	Integrated communication capabilities
ecocirc XL D 32-80	180	G 2 – Rp 1 ¼	•			terminals	no communication protocol
ecocirc XL D 32-100	180	G 2 – Rp 1 ¼	•			terminals	no communication protocol

Twin-head Pump type	Flanged connection						
	Port to port (mm)	Connection	PN 6/10	PN 6	PN 10	Electrical connection	Integrated communication capabilities
ecocirc XL D 32-80 F	220	DN 32	•			terminals	no communication protocol
ecocirc XL D 32-100 F	220	DN 32	•			terminals	no communication protocol
ecocirc XL D 32-120 F	220	DN 32	•			terminals	no communication protocol
ecocirc XL D 40-80.11 F	220	DN 40	•			terminals	no communication protocol
ecocirc XL D 40-80 F	220	DN 40	•			terminals	no communication protocol
ecocirc XL D 40-100.12 F	220	DN 40	•			terminals	no communication protocol
ecocirc XL D 40-100 F	220	DN 40	•			terminals	no communication protocol
ecocirc XL D 40-120 F	250	DN 40	•			terminals	no communication protocol
ecocirc XL D 40-150 F	250	DN 40	•			terminals	no communication protocol
ecocirc XL D 40-180 F	250	DN 40	•			terminals	no communication protocol
ecocirc XL D 50-80 F	240	DN 50	•			terminals	no communication protocol
ecocirc XL D 50-120 F	280	DN 50	•			terminals	no communication protocol
ecocirc XL D 50-150 F	280	DN 50	•			terminals	no communication protocol
ecocirc XL D 50-180 F	280	DN 50	•			terminals	no communication protocol
ecocirc XL D 65-80 F	340	DN 65	•			terminals	no communication protocol
ecocirc XL D 65-120 F	340	DN 65	•			terminals	no communication protocol
ecocirc XL D 65-150 F	340	DN 65	•			terminals	no communication protocol
ecocirc XL D 65-180 F	340	DN 65	•			terminals	no communication protocol
ecocirc XL D 80-120 F	360	DN 80		•		terminals	no communication protocol
ecocirc XL D 80-120 F	360	DN 80			•	terminals	no communication protocol

ecocircXL-modelli-en_h_sc

ecocirc XLplus

Single-head Pump type	Threaded pipe connection						Integrated communication capabilities	Wireless **
	Port to port (mm)	Connection	PN 6/10	PN 6	PN 10	Electrical connection		
ecocirc XLplus 25-40 (N)	180	G 1 ½ – Rp 1	•			plug	Modbus	•
ecocirc XLplus 25-60 (N)	180	G 1 ½ – Rp 1	•			plug	Modbus	•
ecocirc XLplus 25-80	180	G 1 ½ – Rp 1	•			terminals	Modbus & BACnet	•
ecocirc XLplus 25-100	180	G 1 ½ – Rp 1	•			terminals	Modbus & BACnet	•
ecocirc XLplus 32-40 (N)	180	G 2 – Rp 1 ¼	•			plug	Modbus	•
ecocirc XLplus 32-60 (N)	180	G 2 – Rp 1 ¼	•			plug	Modbus	•
ecocirc XLplus 32-80 (N)	180	G 2 – Rp 1 ¼	•			terminals	Modbus & BACnet	•
ecocirc XLplus 32-100 (N)	180	G 2 – Rp 1 ¼	•			terminals	Modbus & BACnet	•

Single-head Pump type	Flanged connection						Integrated communication capabilities	Wireless **
	Port to port (mm)	Connection	PN 6/10	PN 6	PN 10	Electrical connection		
ecocirc XLplus 32-80 F	220	DN 32	•			terminals	Modbus & BACnet	•
ecocirc XLplus 32-100 F	220	DN 32	•			terminals	Modbus & BACnet	•
ecocirc XLplus 32-120 F (N)	220	DN 32	•			terminals	Modbus & BACnet	•
ecocirc XLplus 40-80 F	220	DN 40	•			terminals	Modbus & BACnet	•
ecocirc XLplus 40-100 F	220	DN 40	•			terminals	Modbus & BACnet	•
ecocirc XLplus 40-120 F (N)	250	DN 40	•			terminals	Modbus & BACnet	•
ecocirc XLplus 40-150 F	250	DN 40	•			terminals	Modbus & BACnet	•
ecocirc XLplus 40-180 F	250	DN 40	•			terminals	Modbus & BACnet	•
ecocirc XLplus 50-80 F (N)	240	DN 50	•			terminals	Modbus & BACnet	•
ecocirc XLplus 50-100 F	280	DN 50	•			terminals	Modbus & BACnet	•
ecocirc XLplus 50-120 F (N)	280	DN 50	•			terminals	Modbus & BACnet	•
ecocirc XLplus 50-150 F	280	DN 50	•			terminals	Modbus & BACnet	•
ecocirc XLplus 50-180 F	280	DN 50	•			terminals	Modbus & BACnet	•
ecocirc XLplus 65-80 F (N)	340	DN 65	•			terminals	Modbus & BACnet	•
ecocirc XLplus 65-120 F (N)	340	DN 65	•			terminals	Modbus & BACnet	•
ecocirc XLplus 65-150 F	340	DN 65	•			terminals	Modbus & BACnet	•
ecocirc XLplus 65-180 F	340	DN 65	•			terminals	Modbus & BACnet	•
ecocirc XLplus 80-120 F	360	DN 80		•		terminals	Modbus & BACnet	•
ecocirc XLplus 80-120 F	360	DN 80			•	terminals	Modbus & BACnet	•
ecocirc XLplus 100-120 F	360	DN 100		•		terminals	Modbus & BACnet	•
ecocirc XLplus 100-120 F	360	DN 100			•	terminals	Modbus & BACnet	•

Twin-head Pump type	Threaded pipe connection						Integrated communication capabilities	Wireless **
	Port to port (mm)	Connection	PN 6/10	PN 6	PN 10	Electrical connection		
ecocirc XLplus D 32-80	180	G 2 – Rp 1 ¼	•			terminals	Modbus & BACnet	•
ecocirc XLplus D 32-100	180	G 2 – Rp 1 ¼	•			terminals	Modbus & BACnet	•

Twin-head Pump type	Flanged connection						Integrated communication capabilities	Wireless **
	Port to port (mm)	Connection	PN 6/10	PN 6	PN 10	Electrical connection		
ecocirc XLplus D 32-80 F	220	DN 32	•			terminals	Modbus & BACnet	•
ecocirc XLplus D 32-100 F	220	DN 32	•			terminals	Modbus & BACnet	•
ecocirc XLplus D 32-120 F	220	DN 32	•			terminals	Modbus & BACnet	•
ecocirc XLplus D 40-80 F	220	DN 40	•			terminals	Modbus & BACnet	•
ecocirc XLplus D 40-100 F	220	DN 40	•			terminals	Modbus & BACnet	•
ecocirc XLplus D 40-120 F	250	DN 40	•			terminals	Modbus & BACnet	•
ecocirc XLplus D 40-150 F	250	DN 40	•			terminals	Modbus & BACnet	•
ecocirc XLplus D 40-180 F	250	DN 40	•			terminals	Modbus & BACnet	•
ecocirc XLplus D 50-80 F	240	DN 50	•			terminals	Modbus & BACnet	•
ecocirc XLplus D 50-120 F	280	DN 50	•			terminals	Modbus & BACnet	•
ecocirc XLplus D 50-150 F	280	DN 50	•			terminals	Modbus & BACnet	•
ecocirc XLplus D 50-180 F	280	DN 50	•			terminals	Modbus & BACnet	•
ecocirc XLplus D 65-80 F	340	DN 65	•			terminals	Modbus & BACnet	•
ecocirc XLplus D 65-120 F	340	DN 65	•			terminals	Modbus & BACnet	•
ecocirc XLplus D 65-150 F	340	DN 65	•			terminals	Modbus & BACnet	•
ecocirc XLplus D 65-180 F	340	DN 65	•			terminals	Modbus & BACnet	•
ecocirc XLplus D 80-120 F	360	DN 80		•		terminals	Modbus & BACnet	•
ecocirc XLplus D 80-120 F	360	DN 80			•	terminals	Modbus & BACnet	•

(**) Available as an accessory.

ecocircXLplus-modelli-en_h_sc

CONTROL MODES
Constant pressure
Proportional pressure
Constant speed
Night mode
Control modes influenced by the temperature
ΔP-T control
T - Constant temperature control
ΔT - Differential temperature
Additional operating modes for dual-pump setup
Alternate operation
Backup operation
Parallel operation
Reading and settings on the pump
Pump settings
Control panel and display
Communication
External Start - Stop (Digital input)
Signal relay (Digital Output)
Analog input 0-10V
Analog input 4-20mA for external differential pressure sensor
Temperature sensor (ecocirc XLplus)
Communication BUS (ecocirc XLplus)
Wireless (ecocirc XLplus)

En-Rev_D

CONTROL MODES

ecocirc XL and XLplus can be operated with 3 different functional modes: Constant pressure, Proportional pressure and Fixed speed. The additional Night Mode function can be activated in combination of the 3 functional modes. The pump has been factory set at constant pressure without Night Mode. The set point is factory set and it is suitable for more installations.

Constant pressure

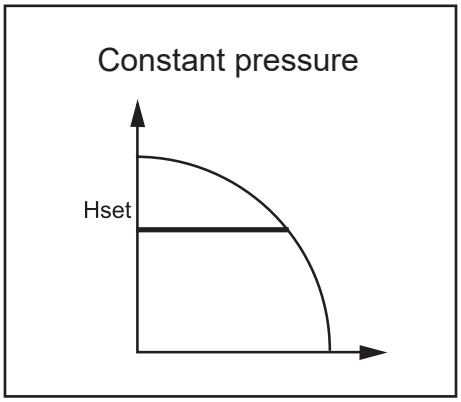

The pump maintains a constant pressure at any flow demand. The desired head of the pump can be set via user interface.

Constant pressure functional mode is recommended in systems with relatively small pressure losses.

Proportional pressure

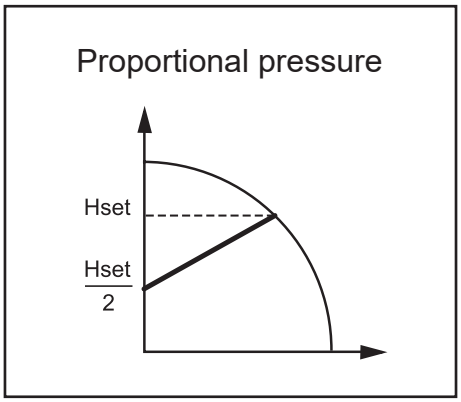

The pump pressure is continuously increased / decreased depending on the flow demand. The maximum head can be set via user interface.

Proportional pressure functional mode is recommended in systems with relatively large pressure losses in the distribution pipes.

Constant Speed

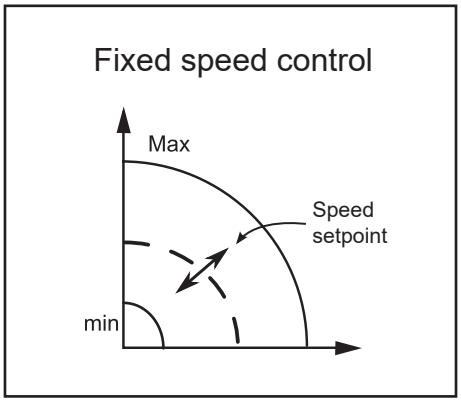

The pump maintains a fixed speed at any flow demand. The speed of the pump can be set via user interface. Constant speed is great when used in the primary or boiler loop in a primary/secondary hydronic system.

Night Mode

This function reduces the power consumption of the pump to the minimum when the heating system is not running. An autolearn process detects the proper working conditions. The electronic registers a drop of the water temperature and the circulator automatically decreases the speed. The pump returns to the original set point as soon as the system restarts and the water temperature has increased.

The Night Mode can be activated in combination with:

- Proportional pressure
- Constant pressure
- Constant speed

It cannot be used in cooling systems.

The prerequisite of this functional mode are:

- The pump has to be installed in the supply line;
- The night condition can be detected with good confidence if a higher level control system is set to change the supply temperature.

CONTROL MODES INFLUENCED BY THE TEMPERATURE

ecocirc XLplus version can be used with 3 additional control modes depending on the temperature of the pumped media. The set-up of the control modes as well as of the external temperature sensor, necessary for ΔT control, is available only through Communication BUS or Wireless capabilities by the connection to an external device.

ΔP – T Control

This function changes the nominal differential pressure set point depending on the temperature of the pumped media.
The temperature is controlled by the built-in temperature sensor or by an additional external temperature sensor (type KTY82).

T – Constant temperature control

The functional mode changes the speed of the pump in order to maintain constant temperature of the pumped media.
The temperature is controlled by the built-in temperature sensor or by an additional external temperature sensor (type KTY82).
It is suitable for heating systems with fixed system characteristics, for example domestic hot water systems.

ΔT – Differential temperature control

The function changes the speed of the pump in order to maintain a constant differential temperature of the pumped media.
This function requires an additional external temperature sensor (type KTY82) that controls, together with the built-in temperature sensor, the differential water temperature in the system.

ADDITIONAL OPERATING MODES FOR DUAL-PUMP SET UP

Each ecocirc XLplus circulator can be configured to work together with another one in dual-pump functionality.

The dual-pump setting is already configured as default with twin pumps, but can also be set in case of two single head circulators if they are connected to each other through the communication port RS485; in this second case the two single head pumps must be of the same model, and once connected it is necessary to establish which one is the main pump (master) and which is the secondary pump (slave).

When the communication ports are to be used for communication between two circulators, and the pump is also to be connected to an external device (i.e. Building Management System) via port RS485, then it is necessary to install the optional module RS485. This enables the use of the second port (and this must be done on the main pump).

ecocirc XLplus dual pump can be used in different operating modes.

Back-up operation

Only the main pump (master) operates, while the second (slave) pump starts running in case of failure of the main pump. The back-up pump is automatically put into operation once a day for a few minutes in order to prevent rotor-blocking due to long-term inactivity.
In case of a failure of the main pump, the secondary pump starts running immediately, using the same parameters and functionality of the main.

Alternate operation

In this functional mode only one pump runs at a time.
The working time is switched every 24 hours so the workload is balanced between both pumps.
In case of failure of one of the two pumps, the other will immediately start operating continuously.

Parallel operation

Both pumps run simultaneously with the same setpoint. The main pump determines the needs of the entire system and it is able to optimize performance; to ensure the required performance with minimum energy consumption, the main pump starts or stops the second pump based on the head and flow demand.

In the case of ecocirc XLplus twin models, there is the possibility that in some situations this functional mode will generate non-optimal behaviour of the circulator, changing the speed of the two motors continuously and generating a noise from the flap valve inside the pump housing. In this situation “forced parallel” can be set to ensure that the pumps operate at the same setpoint with stable behaviour.

READING AND SETTINGS ON THE PUMP

Pump settings

To change the pump settings it can be used one of the following ways:

- User Interface
- Communication BUS (ecocirc XLplus only)
- Wireless capability (ecocirc XLplus only).

Control panel and Display

ecocirc XL and ecocirc XLplus features a 3 or 4 digits display with intuitive and user-friendly interface.
The control panel has 4 self-explanatory push buttons and is designed to give quick and easy access to the pump and performance data on installation site.

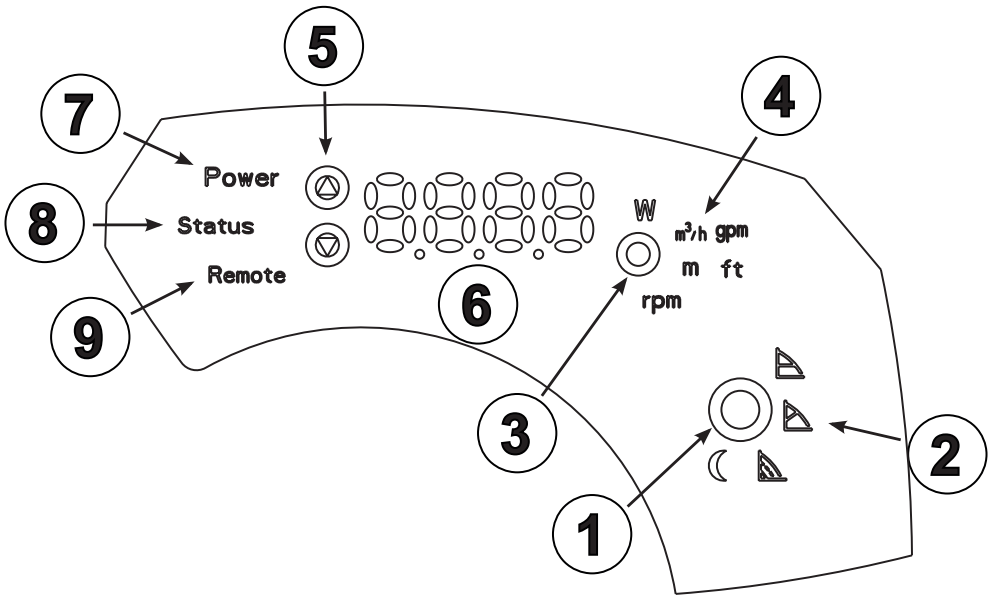

Ref.	Function	Description
1	Control Mode Button	Operating modes are cyclically changed by pressing the button
2	Control mode indicators	- Constant Pressure - Proportional Pressure - Constant Speed - Night Mode
3	Parameter Button	The unit of measurement changes by pressing the button
4	Parameter indicators	The units of measuremet displayed are: - Power consumption (W) - Flow rate (m^3/h - gpm) - Head (m - ft) - Speed (rpm) By pressing the "Parameter Button" for more than 1 second the unit of measurement changes to: - Flow: m^3/h <--> US gpm - Head: m <--> ft
5	Setting Buttons	To change the set point: - Press one of the setting buttons: displays starts to blinking the actual set point. - Change the value using the button. - Wait 3 seconds to store and activate the new set point: the display will stop blinking.
6	Digital Display	
7	Power indicator	When lighted-up power supply is present
8	Status / Fault indicator	- Green: pump is working properly - Orange: alarm for system problem - Red: pump failure
9	Remote Control indicator	- Off: remote communication deactivated - On: remote communication activated

FLOW ESTIMATION ACCURACY

Ecocirc XL has a special software function able to estimate the actual flow rate across the pump.
The estimation is based on a calculation by knowing the speed and the hydraulic design of the pump.
The estimated flow rate has an accuracy specified as ± xx % of Qmax determined through laboratory tests using pure water at 20°C.
Water/glycol mixture and different fluid temperature can decrease the accuracy.
The ± xx % of Qmax accuracy is valid for a flow rate range up to 70% of the Qmax.
In case of low flow rate (< xx% of Qmax) the pump could display “ON” meaning both that the actual flow rate is ZERO or is too low to be properly estimated.

The table below shows the flow accuracy of the complete “ecocirc XL” range. The calculations are based on a single-head pump cast iron model (±15% of Qmax) and single-head pump stainless steel model or twin-head pump (±20% of Qmax).

Pump type	Q Max	Single-Head Pumps Cast Iron	Single-Head Pumps Stainless Steel Twin-Head Pumps
		± 15%	± 20%
	[m³/h]	[m³/h]	[m³/h]
ecocirc XL 25-40 (N)	4,2	0,6	0,84
ecocirc XL 25-60 (N)	5,9	0,9	1,18
ecocirc XL 32-40 (N)	4,3	0,6	0,9
ecocirc XL 32-60 (N)	6,0	0,9	1,2
ecocirc XL 25-80	9,5	1,4	-
ecocirc XL 25-100	10,2	1,5	-
ecocirc XL (D) 32-80 (N)	10,2	1,5	2,0
ecocirc XL (D) 32-100 (N)	10,7	1,6	2,1
ecocirc XL (D) 32-80 F	10,2	1,5	2,0
ecocirc XL (D) 32-100 F	10,8	1,6	2,2
ecocirc XL (D) 32-120 F (N)	22,5	3,4	4,5
ecocirc XL (D) 40-80.11 F	10,7	1,6	2,1
ecocirc XL (D) 40-80 F	19,3	2,9	3,9
ecocirc XL (D) 40-100.12 F	10,7	1,6	2,1
ecocirc XL (D) 40-100 F	20,8	3,1	4,2
ecocirc XL (D) 40-120 F (N)	26,8	4,0	5,4
ecocirc XL (D) 40-150 F	26,6	4,0	5,3
ecocirc XL (D) 40-180 F	28,9	4,3	5,8
ecocirc XL (D) 50-80F (N)	29,6	4,4	5,9
ecocirc XL 50-100 F	29,7	4,5	-
ecocirc XL (D) 50-120 F (N)	45,8	6,9	9,2
ecocirc XL (D) 50-150 F	53,7	8,1	10,7
ecocirc XL (D) 50-180 F	54,1	8,1	10,8
ecocirc XL (D) 65-80 F (N)	35,2	5,3	7,0
ecocirc XL (D) 65-120 F (N)	47,1	7,1	9,4
ecocirc XL (D) 65-150 F	61,6	9,2	12,3
ecocirc XL (D) 65-180 F	70,6	10,6	14,1
ecocirc XL (D) 80-120 F	71,7	10,8	14,3
ecocirc XL 100-120 F	62,7	9,4	-

Zero_flow-en_a

Note: the estimated flow has to be considered valid only as an indication. We recommend to not use the estimated flow for controlling purpose.

Note: in case of twin pump head the estimated flow rate of the right and left head could be different due to the different hydraulic design of the two heads.

COMMUNICATION

ecocirc XL and ecocirc XLplus enables communication by the following:

- External start / stop (Digital input)
- Signal relay (Digital output)
- Analog input 0-10 V
- Analog input 4-20 mA
- Communication BUS (ecocirc XLplus only)
- Wireless capability (ecocirc XLplus only).

External start / stop (Digital Input)

The pump can be started or stopped via an external potential-free contact or a relay.
The pump unit is provided by default with the digital input short-circuited.

Signal relay (Digital output)

The pump is equipped with a relay for a potential-free fault signal. If there is a fault the relay is activated together with the red status light and the error code on the user interface display.

Analog input (0-10V)

The pump integrates a 0-10 V analog input.
When a voltage input is detected the pump switch to fixed speed control mode automatically and start to work according to the following diagram:

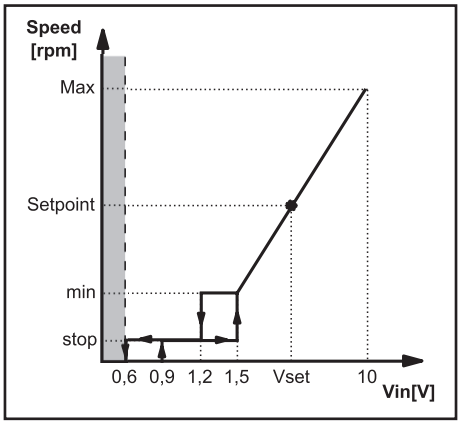

Analog input (4-20mA)

The pump can be equipped with a 4-20mA external differential pressure sensor with the purpose of increasing the precision in operating modes involved with pressure regulation.

Communication BUS

ecocirc XLplus can communicate remotely through a built in RS485 port with the following protocols:

- Modbus RTU
- Bacnet MSTP (not available on ecocirc XL and XLplus 25-40 (N), 25-60 (N), 32-40 (N), 32-60 (N)).

The circulator is factory setting with Modbus protocol.
This communication BUS capability offers the possibility to:

- connect two pumps in dual pumps operation;
- connect the pump to a BMS (Building Management System);
- connect the pump to an external device (PC or laptop).

It can be used for the following functions:

- Reading of operating parameters
- Reading of warning and alarm indications
- Setting the control mode
- Setting the set point
- Setting the control modes influenced by the temperature
- Give access to all the parameters that cannot be set-up by the user interface.

To offer a connection to an external BMS or to a generic external device even when the standard communication BUS is used for dual pump operations (in case of twin-head pumps), the pump can be equipped with an additional communication BUS provided as an optional.

Wireless

ecocirc XLplus is designed for wireless communication with Smart-Phone or Tablet by an optional Wireless module.

The Wireless communication capability offers the possibility to read and set up the pump status.
It can be used for the following functions:

- Reading of operating parameters
- Reading of warning and alarm indications
- Setting the control mode
- Setting the set point
- Setting the control modes influenced by the temperature
- Give access to all the parameters that cannot be set-up by the user interface.

OPERATING CONDITIONS

Water conditions

General recommendation:
- Water in heating systems: according to VDI 2035
- Water containing glycol: water/glycol mixture up to 50%.

Ambient conditions

The unit can be transported only in vertical position as indicated on the packaging. The product can be transported at an ambient temperature from -40°C to 70°C with humidity maximum 95% and protected against dirt, heat source and mechanical damage.
The product must be stored at an ambient temperature from -25°C to 55°C and maximum humidity of 95%.

Pumped liquids

The pump is suitable for thin, clear, non-aggressive and non-explosive liquids, not containing abrasive, solid or fibrous substances, toxic or corrosive liquids, potable liquids other than water or liquids not compatible with the pump construction material.
The pump is electronically protected against overloads; for this reason the use of water + glycol in the system can reduce the performance of the circulator, according to the percentage of glycol and the temperature of the fluid.

Minimum inlet pressure at the suction port

The values in the table are the inlet pressure above the atmospheric pressure.

Nominal Diameter	Fluid temperature 25°C	Fluid temperature 95°C	Fluid temperature 110°C
Rp 1	0,2 bar	1 bar	1,6 bar
Rp 1 1/4	0,2 bar	1 bar	1,6 bar
DN 32	0,3 bar	1,1 bar	1,7 bar
DN 40	0,3 bar	1,1 bar	1,7 bar
DN 50	0,3 bar	1,1 bar	1,7 bar
DN 65	0,5 bar	1,3 bar	1,9 bar
DN 80	0,5 bar	1,3 bar	1,9 bar
DN 100	0,5 bar	1,3 bar	1,9 bar

En-Rev_A

NOTICE:
- Do not apply a pressure lower than the values specified as this could cause cavitation and damage the pump.
- The inlet pressure plus the pump pressure against a closed valve must be lower than maximum admissible system pressure.

ELECTRICAL DATA

Pump type	ecocirc XL ecocirc XLplus
Rated Voltage	1 x 230 V +/- 10%
Frequency	50/60 Hz
IP Protection	IP 44
Insulation class	Class 155 (F)
Digital input	External potential free contact Contact load: 5V, 10 mA
Digital output	Vmax < 250 VAC Imax < 2 A
Analog input	0-10 V 4-20 mA
Communication Bus	Modbus RTU BACnet MS/TP (not available for ecocirc XL and XLplus 25-40 (N), 25-60 (N), 32-40 (N) and 32-60 (N)).
Leakage current	< 3.5 mA
ECM (Electomagnetic compatibility)	EN 55014-1:2006 + A1:2009 + A2:2011, EN 55014-2:1997 + A1:2001 + A2:2008, EN 61000-3-2:2006 + A1:2009 + A2:2009, EN 61000-3-3:2008, 61800-3:2004+A1:2012.

En-Rev_B

CONSTRUCTION

The circulator is a wet rotor circulation pump: all rotating components are immersed in the pumped liquid, which cools the motor and lubricates the bearings. The motor has high-efficiency due to the permanent magnet rotor, and it is driven by an electronic drive integrated with the circulator.

ecocirc XL and ecocirc XLplus are of the spherical rotor type for models 25-40, 25-60,32-40, 32-60: the specific design of these circulators prevents blocked rotors and / or bearing damage caused by the presence of impurities in the water. An automatic air-venting routine allows the perfect filling of water in the rotor zone, to avoid potential dry-runs: this routine can also be manually re-called by the user whenever deemed appropriate.

The remaining models in the ecocirc XL and ecocirc XL-plus range have electrical motors of the cylindrical-rotor type.
The pump automatically protects itself from poor lubrication with an automatic air-venting routine during the startup phase (and it can be also manually re-called whenever deemed appropriate), along with the detection of any dry-run; in addition, the circulator prevents itself from potential rotor-locking related to the presence of solid particles suspended in the pumped liquid through a system of internal filters.

In case of stand-by periods, an automatic anti-block routine rotates the rotor for few minutes a day..

The pump features the following:

- Controller integrated in the control box
- User interface on the control box
- Cast iron or stainless steel pump housing
- Twin-head versions
- No external motor protection required
- Insulation shell supplied with single head pumps for heating systems.

Pump connections

Threaded pipe connections according to ISO 228-1
Flange dimensions to EN 1092-2.

Surface treatment

For heating applications the material is cast iron G250 as standard.
Pump coating (cataphoretyc) in black color.

SECTIONAL DRAWINGS (25-40, 25-60, 32-40, 32-60 models)

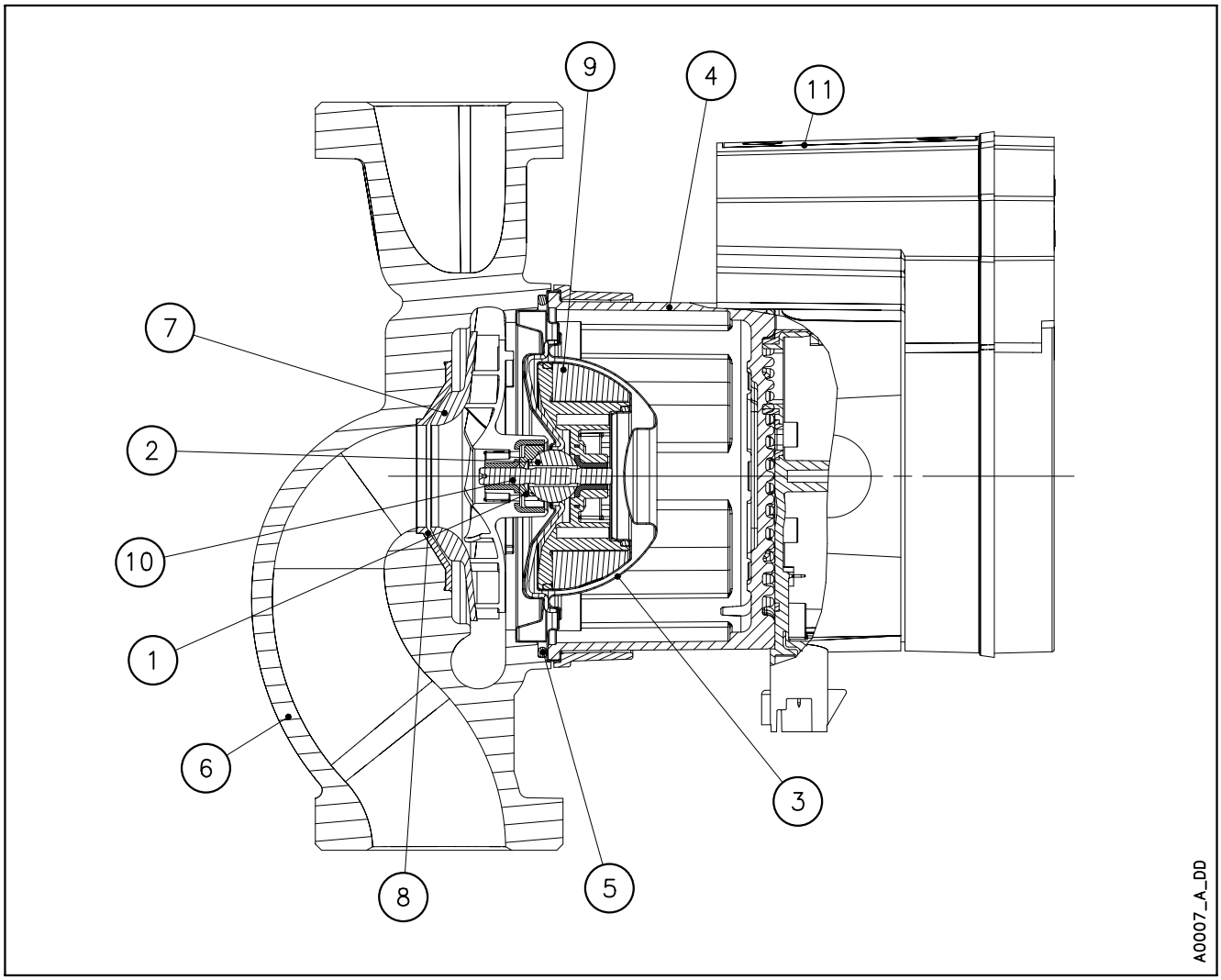

TABLES OF MATERIALS

Ref. N.	Name	Material	Reference Standards Europe
1	Bearing washer	Technopolymer	
2	Spherical bearing	Aluminum oxide	
3	Casing plate	Stainless steel	EN 1.4401
4	Motor housing	Aluminum	
5	O-rings	EPDM	
6	Pump housing	Cast iron	EN 1561-GJL-250 (JL1040)
		Stainless steel	EN 1.4301
7	Impeller	PPO	
8	Neck ring	Stainless steel	
9	Rotor can	Stainless steel	EN 1.4401
10	Shaft	Stainless steel	EN 1.4301
11	Control box	Polycarbonate	

XL1-en_b_tm

SECTIONAL DRAWINGS

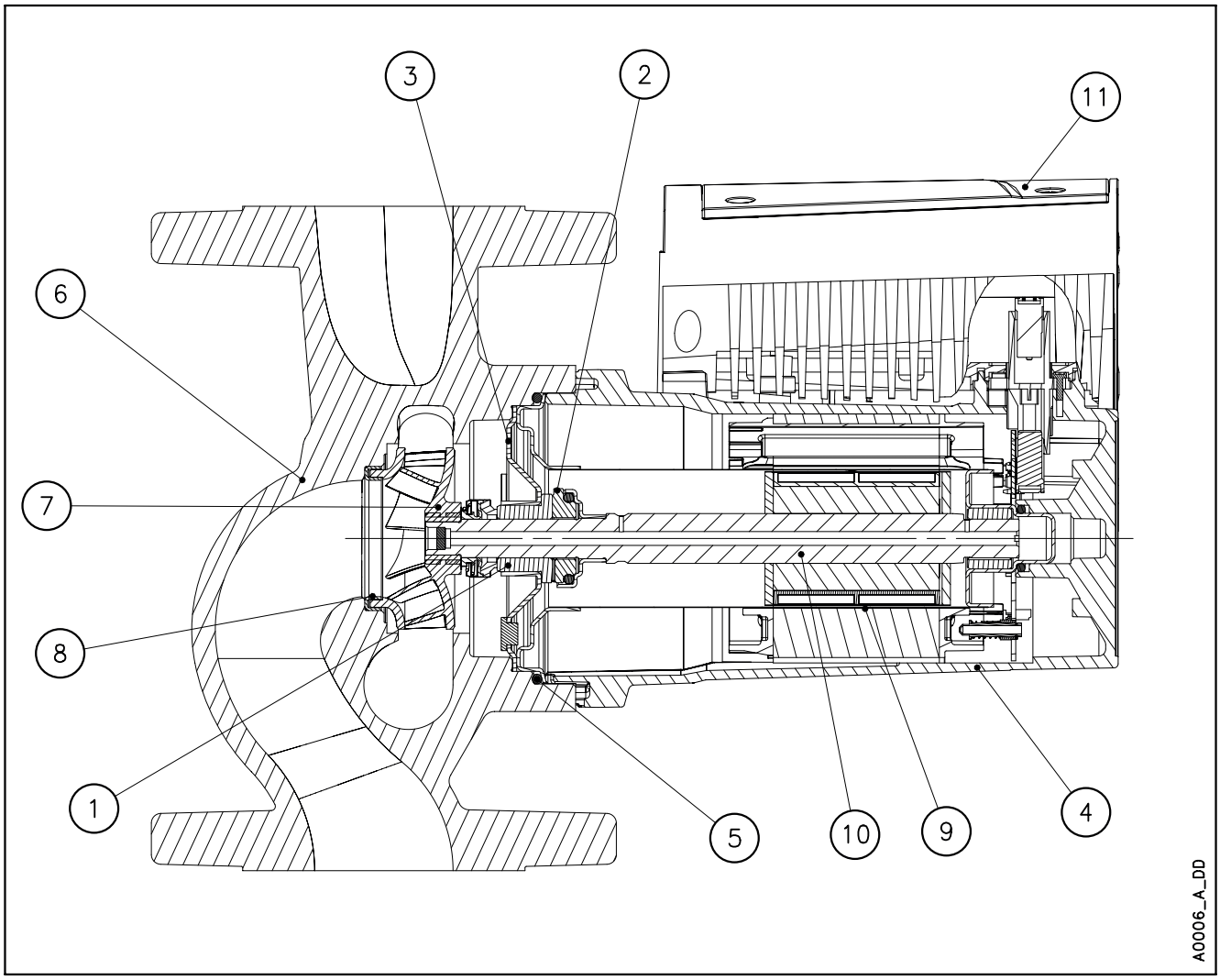

TABLES OF MATERIALS

Ref. N.	Name	Material	Reference Standards Europe
1	Bush Bearing	Carbon, resin impregnated	
2	Thrust bearing	Aluminum oxide	
3	Bearing plate	Stainless steel	EN 1.4301
4	Motor housing	Aluminum	
5	O-rings	EPDM	
6	Pump housing	Cast iron	EN 1561-GJL-250 (JL1040)
		Stainless steel	EN 1.4308
7	Impeller	PPS	
		Stainless steel	EN 1.4308
8	Wear ring	Stainless steel	EN 1.4301
9	Rotor can	Stainless steel	EN 1.4435
10	Shaft	Stainless steel	EN 1.4028
11	Control box	Polycarbonate	

XL2-en_d_tm

Mechanical installation

ecocirc XL is designed for indoor installations.
The pump must be installed with the pump head in a horizontal position, in vertical as well as horizontal pipes. The arrow of the pump housing shows the flow direction through the pump. The pump head can be rotated so the display is in a convenient position.

Pipes and valves must be correctly sized. Pipe work must not transmit any load or torque to pump flanges.

If it's possible and applicable install the thermal shells included on the delivery. Do not insulate the motor housing, the electronics can overheat so that the pump automatically switch off. To ensure adequate cooling of the pump head, position the circulator in such a way that sufficient cooling is ensured. Air temperature must not exceed +40°C (+104°F).

The thermal shells must only be used in hot water circulation applications with fluid temperature above +20°C (+68°F). The thermal shells are not able to enclose the pump housing in a diffusion-proof manner: if the installer creates the diffusion-proof insulation, then the pump housing must not be insulated above the motor flange; the drain opening must not be obstructed so that the accumulated condensation can run out.

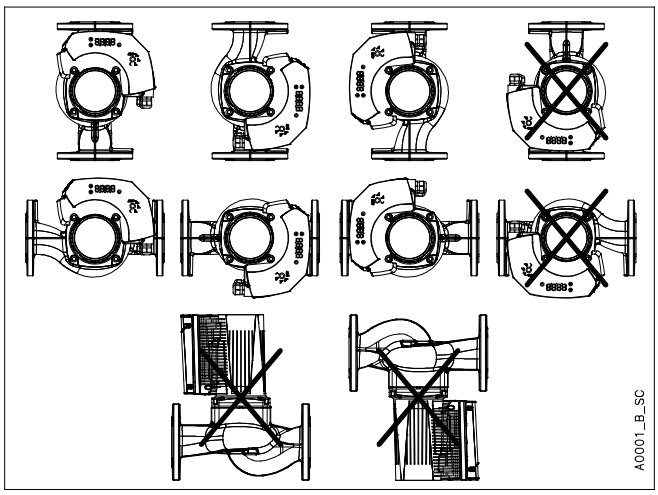

Electrical installation

The local regulations in force overrule specified requirements listed here below.

Check that the following requirements for electrical connection are met:

- The electrical leads are protected from high temperature, vibrations and collisions.
- Use cables according to rules with 3 leads (2 + earth/ground). All cables must be heat-resistant up to +85°C (+185°F). Cables should be positioned so that they do not touch the motor housing or pipework.
- The current type and voltage of mains connection must correspond to the data plate on the pump.
- Always connect the external protection conductor to ground (earth) terminal before making other electrical connections. All electrical equipment must be ground (earth) connected. This applies to the pump unit and related equipment.
- The power supply line is provided with:
  - A high-sensitivity differential switch (30 mA) (residual current device RCD) suitable for earth fault currents with DC or pulsating DC content (a Type B RCD is suggested).

  - A mains isolator switch with a contact gap of at least 3 mm.
- The number of power on / power off of the pump must be less than 3 times per hour and in any case less than 20 per 24h. In case of frequent start / stop operations required by the application, the use of the dedicated external start / stop input is strongly suggested. Wires connected to supply terminals and fault signal relay (NO, C) must be separated from others by reinforced insulation.

Check that the following requirements for the electrical control panel are met:

- The control panel must match the ratings of the electric pump. Improper combinations could fail to guarantee the protection of the unit.
- The control panel must protect the pump against short-circuit. A time lag fuse or a circuit breaker (Type C model is suggested) can be used to protect the pump.
- The pump has built in overload and thermal protection, no additional overload protection is required.

ecocirc XL - XLplus

Models with plug

Power Supply: 1 x 230V ±10%, 50/60Hz
Follow the subsequent steps:

1. Open the connector cover and insert the cable inside the cable gland
2. Pull down the contact retention spring
3. Connect the cable according to the wiring diagram
4. Align the two parts of the connector
5. Push the two pars one inside the other
6. Close the connector and tight carefully the cable gland

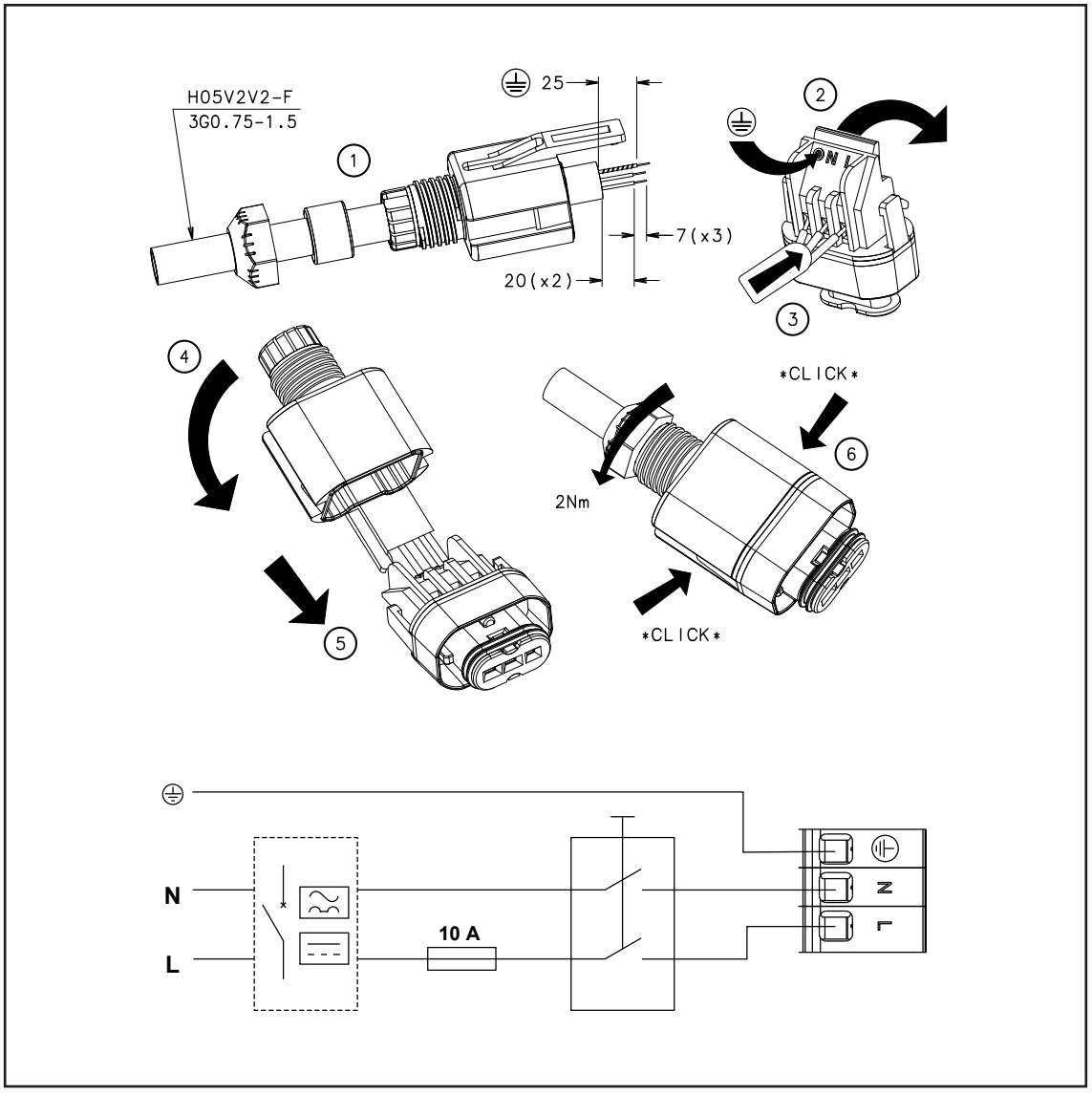

ecocirc XL - XLplus

Models with a standard terminal block connection

Power Supply: 1 x 230V ±10%, 50/60Hz
Follow the subsequent steps to connect:

1. Open the terminal block cover removing the screws
2. Insert the cable inside the M20 cable gland
3. Connect the cable according to the wiring diagram

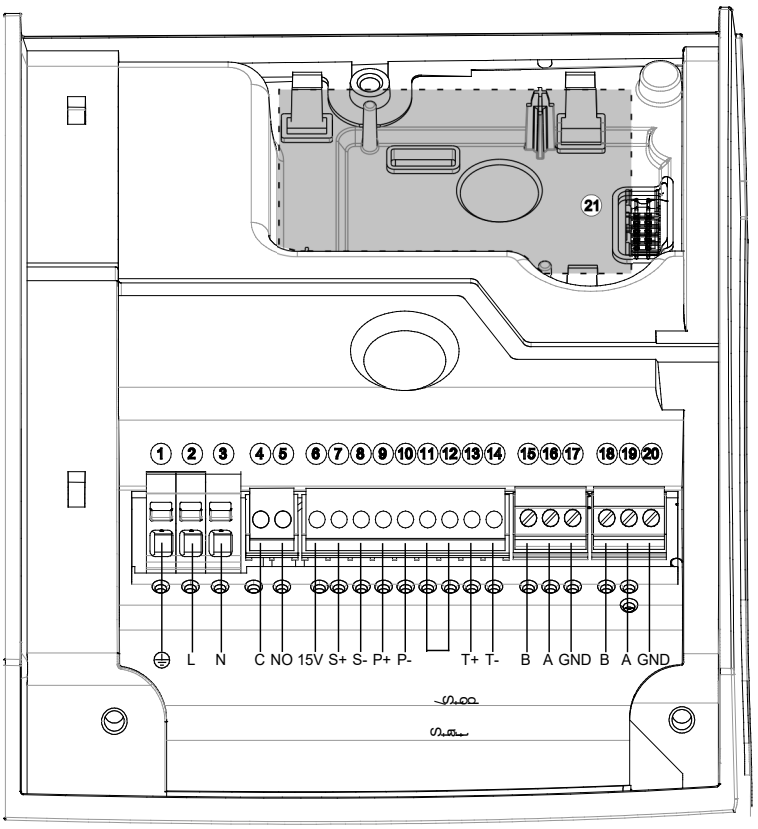

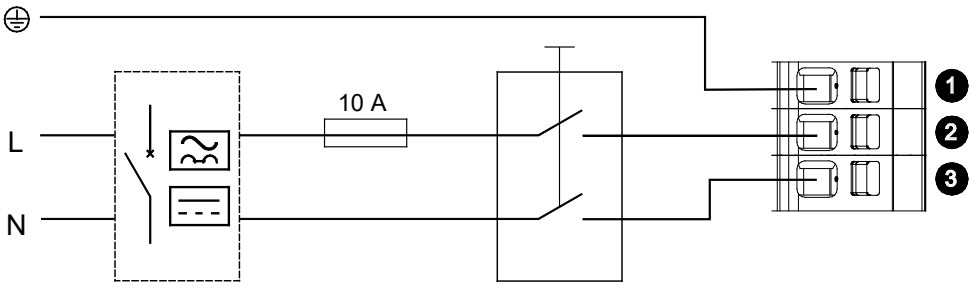

ecocirc XL - XLplus

Input - output Connections

Polarization-keys on terminals are used to prevent wrong insertions.
For models up to 100W refer to the following image.
For all other models refer to the image of the previous page.

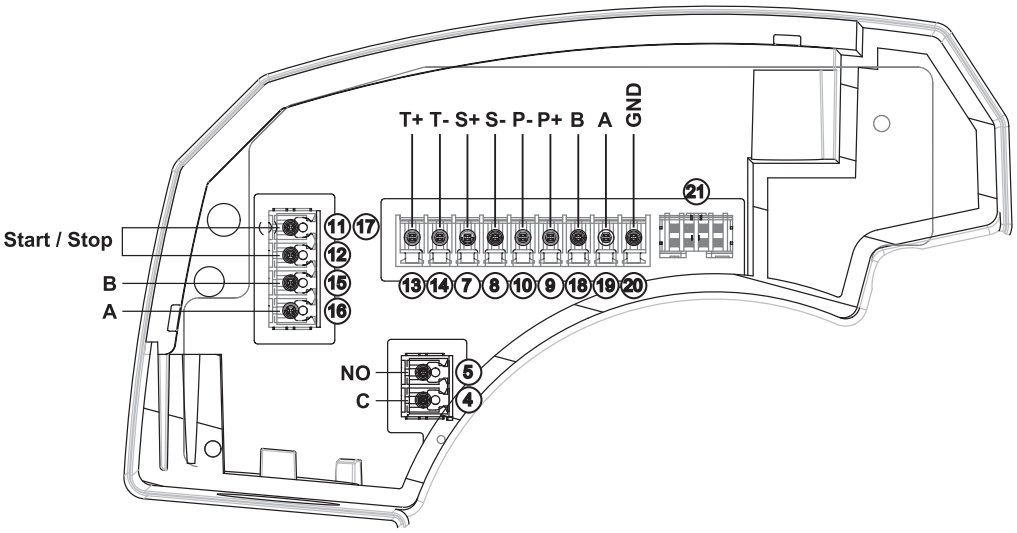

Function	Terminal pair	Contact rating
External start/stop	(11) (12)	The drive provides 5VDC through these terminals: no external voltage must be provided!
0-10V external analog input	(7) (8)	
Fault signal	(4) (5)	Max 250V at 2A (inductive load)
4-20mA pressure sensor input	(9) (10)	
External temperature sensor	(13) (14)	The drive works with a KTY82 temperature sensor (1KΩ at 25°C)
Communication bus (standard)	(15) (16) (17)	TIA/EIA RS485
Communication bus (optional)	(18) (19) (20)	TIA/EIA RS485
Optional Wireless / RS485 module	(21)	

En-Rev_B

ecocirc XL

Single-head Pump type	Threaded pipe connection					
	Port to port (mm)	Cast iron				AISI 304
		Connection	PN 6/10	PN 6	PN 10	PN 6/10
ecocirc XL 25-40 (N)	180	G 1 ½ – Rp 1	605009100			605009300
ecocirc XL 25-60 (N)	180	G 1 ½ – Rp 1	605009150			605009350
ecocirc XL 25-80	180	G 1 ½ – Rp 1	E503010AA			
ecocirc XL 25-100	180	G 1 ½ – Rp 1	E503020AA			
ecocirc XL 32-40 (N)	180	G 2 – Rp 1 ¼	605009200			605009400
ecocirc XL 32-60 (N)	180	G 2 – Rp 1 ¼	605009250			605009450
ecocirc XL 32-80 (N)	180	G 2 – Rp 1 ¼	E503030AA			E510010AA
ecocirc XL 32-100 (N)	180	G 2 – Rp 1 ¼	E503040AA			E510020AA

Single-head Pump type	Flanged connection					
	Port to port (mm)	Cast iron				AISI 304
		Connection	PN 6/10	PN 6	PN 10	PN 6/10
ecocirc XL 32-80 F	220	DN 32	E503050AA			
ecocirc XL 32-100 F	220	DN 32	E503060AA			
ecocirc XL 32-120 F (N)	220	DN 32	E503070AA			E510030AA
ecocirc XL 40-80.11 F	220	DN 40	E500800AA			
ecocirc XL 40-80 F	220	DN 40	E501130AA			
ecocirc XL 40-100.12 F	220	DN 40	E500810AA			
ecocirc XL 40-100 F	220	DN 40	E501140AA			
ecocirc XL 40-120 F (N)	250	DN 40	E503100AA			E510040AA
ecocirc XL 40-150 F	250	DN 40	E501010AA			
ecocirc XL 40-180 F	250	DN 40	E501020AA			
ecocirc XL 50-80 F (N)	240	DN 50	E501160AA			E510050AA
ecocirc XL 50-100 F	280	DN 50	E501150AA			
ecocirc XL 50-120 F (N)	280	DN 50	E503130AA			E510070AA
ecocirc XL 50-150 F	280	DN 50	E501030AA			
ecocirc XL 50-180 F	280	DN 50	E501040AA			
ecocirc XL 65-80 F (N)	340	DN 65	E503140AA			E510060AA
ecocirc XL 65-120 F (N)	340	DN 65	E503150AA			E510080AA
ecocirc XL 65-150 F	340	DN 65	E501050AA			
ecocirc XL 65-180 F	340	DN 65	E501060AA			
ecocirc XL 80-120 F	360	DN 80		E503170AA		
ecocirc XL 80-120 F	360	DN 80			E503160AA	
ecocirc XL 100-120 F	360	DN 100		E503180AA		
ecocirc XL 100-120 F	360	DN 100			E503190AA	

Twin-head Pump type	Threaded pipe connection					
	Port to port (mm)	Cast iron				
		Connection	PN 6/10	PN 6	PN 10	
ecocirc XL D 32-80	180	G 2 – Rp 1 ¼	E502010AA			
ecocirc XL D 32-100	180	G 2 – Rp 1 ¼	E502020AA			

Twin-head Pump type	Flanged connection					
	Port to port (mm)	Cast iron				
		Connection	PN 6/10	PN 6	PN 10	
ecocirc XL D 32-80 F	220	DN 32	E502030AA			
ecocirc XL D 32-100 F	220	DN 32	E502040AA			
ecocirc XL D 32-120 F	220	DN 32	E502070AA			
ecocirc XL D 40-80.11 F	220	DN 40	E500900AA			
ecocirc XL D 40-80 F	220	DN 40	E501170AA			
ecocirc XL D 40-100.12 F	220	DN 40	E500910AA			
ecocirc XL D 40-100 F	220	DN 40	E501180AA			
ecocirc XL D 40-120 F	250	DN 40	E502080AA			
ecocirc XL D 40-150 F	250	DN 40	E501070AA			
ecocirc XL D 40-180 F	250	DN 40	E501080AA			
ecocirc XL D 50-80 F	240	DN 50	E501200AA			
ecocirc XL D 50-120 F	280	DN 50	E503450AA			
ecocirc XL D 50-150 F	280	DN 50	E501090AA			
ecocirc XL D 50-180 F	280	DN 50	E501100AA			
ecocirc XL D 65-80 F	340	DN 65	E502100AA			
ecocirc XL D 65-120 F	340	DN 65	E503470AA			
ecocirc XL D 65-150 F	340	DN 65	E501110AA			
ecocirc XL D 65-180 F	340	DN 65	E501120AA			
ecocirc XL D 80-120 F	360	DN 80		E503480AA		
ecocirc XL D 80-120 F	360	DN 80			E503490AA	

Pn-ecocircXL-en_i_sc

ecocirc XLplus

Single-head Pump type	Threaded pipe connection					
	Port to port (mm)	Cast iron				AISI 304
		Connection	PN 6/10	PN 6	PN 10	PN 6/10
ecocirc XLplus 25-40 (N)	180	G 1 ½ – Rp 1	605009125			605009325
ecocirc XLplus 25-60 (N)	180	G 1 ½ – Rp 1	605009175			605009375
ecocirc XLplus 25-80	180	G 1 ½ – Rp 1	E503210AA			
ecocirc XLplus 25-100	180	G 1 ½ – Rp 1	E503220AA			
ecocirc XLplus 32-40 (N)	180	G 2 – Rp 1 ¼	605009225			605009425
ecocirc XLplus 32-60 (N)	180	G 2 – Rp 1 ¼	605009275			605009475
ecocirc XLplus 32-80 (N)	180	G 2 – Rp 1 ¼	E503230AA			E510090AA
ecocirc XLplus 32-100 (N)	180	G 2 – Rp 1 ¼	E503240AA			E510100AA

Single-head Pump type	Flanged connection					
	Port to port (mm)	Cast iron				AISI 304
		Connection	PN 6/10	PN 6	PN 10	PN 6/10
ecocirc XLplus 32-80 F	220	DN 32	E503250AA			
ecocirc XLplus 32-100 F	220	DN 32	E503260AA			
ecocirc XLplus 32-120 F (N)	220	DN 32	E503270AA			E510110AA
ecocirc XLplus 40-80 F	220	DN 40	E501330AA			
ecocirc XLplus 40-100 F	220	DN 40	E501340AA			
ecocirc XLplus 40-120 F (N)	250	DN 40	E503300AA			E510120AA
ecocirc XLplus 40-150 F	250	DN 40	E501210AA			
ecocirc XLplus 40-180 F	250	DN 40	E501220AA			
ecocirc XLplus 50-80 F (N)	240	DN 50	E501360AA			E510130AA
ecocirc XLplus 50-100 F	280	DN 50	E501350AA			
ecocirc XLplus 50-120 F (N)	280	DN 50	E503330AA			E510150AA
ecocirc XLplus 50-150 F	280	DN 50	E501230AA			
ecocirc XLplus 50-180 F	280	DN 50	E501240AA			
ecocirc XLplus 65-80 F (N)	340	DN 65	E503340AA			E510140AA
ecocirc XLplus 65-120 F (N)	340	DN 65	E503350AA			E510160AA
ecocirc XLplus 65-150 F	340	DN 65	E501250AA			
ecocirc XLplus 65-180 F	340	DN 65	E501260AA			
ecocirc XLplus 80-120 F	360	DN 80		E503370AA		
ecocirc XLplus 80-120 F	360	DN 80			E503360AA	
ecocirc XLplus 100-120 F	360	DN 100		E503380AA		
ecocirc XLplus 100-120 F	360	DN 100			E503390AA	

Twin-head Pump type	Threaded pipe connection					
	Port to port (mm)	Cast iron				
		Connection	PN 6/10	PN 6	PN 10	
ecocirc XLplus D 32-80	180	G 2 – Rp 1 ¼	E502110AA			
ecocirc XLplus D 32-100	180	G 2 – Rp 1 ¼	E502120AA			

Twin-head Pump type	Flanged connection					
	Port to port (mm)	Cast iron				
		Connection	PN 6/10	PN 6	PN 10	
ecocirc XLplus D 32-80 F	220	DN 32	E502130AA			
ecocirc XLplus D 32-100 F	220	DN 32	E502140AA			
ecocirc XLplus D 32-120 F	220	DN 32	E502170AA			
ecocirc XLplus D 40-80 F	220	DN 40	E501370AA			
ecocirc XLplus D 40-100 F	220	DN 40	E501380AA			
ecocirc XLplus D 40-120 F	250	DN 40	E502180AA			
ecocirc XLplus D 40-150 F	250	DN 40	E501270AA			
ecocirc XLplus D 40-180 F	250	DN 40	E501280AA			
ecocirc XLplus D 50-80 F	240	DN 50	E501400AA			
ecocirc XLplus D 50-120 F	280	DN 50	E503550AA			
ecocirc XLplus D 50-150 F	280	DN 50	E501290AA			
ecocirc XLplus D 50-180 F	280	DN 50	E501300AA			
ecocirc XLplus D 65-80 F	340	DN 65	E502200AA			
ecocirc XLplus D 65-120 F	340	DN 65	E503570AA			
ecocirc XLplus D 65-150 F	340	DN 65	E501310AA			
ecocirc XLplus D 65-180 F	340	DN 65	E501320AA			
ecocirc XLplus D 80-120 F	360	DN 80		E503580AA		
ecocirc XLplus D 80-120 F	360	DN 80			E503590AA	

Pn-ecocircXLplus-en_i_sc

ecocirc XL-XLplus

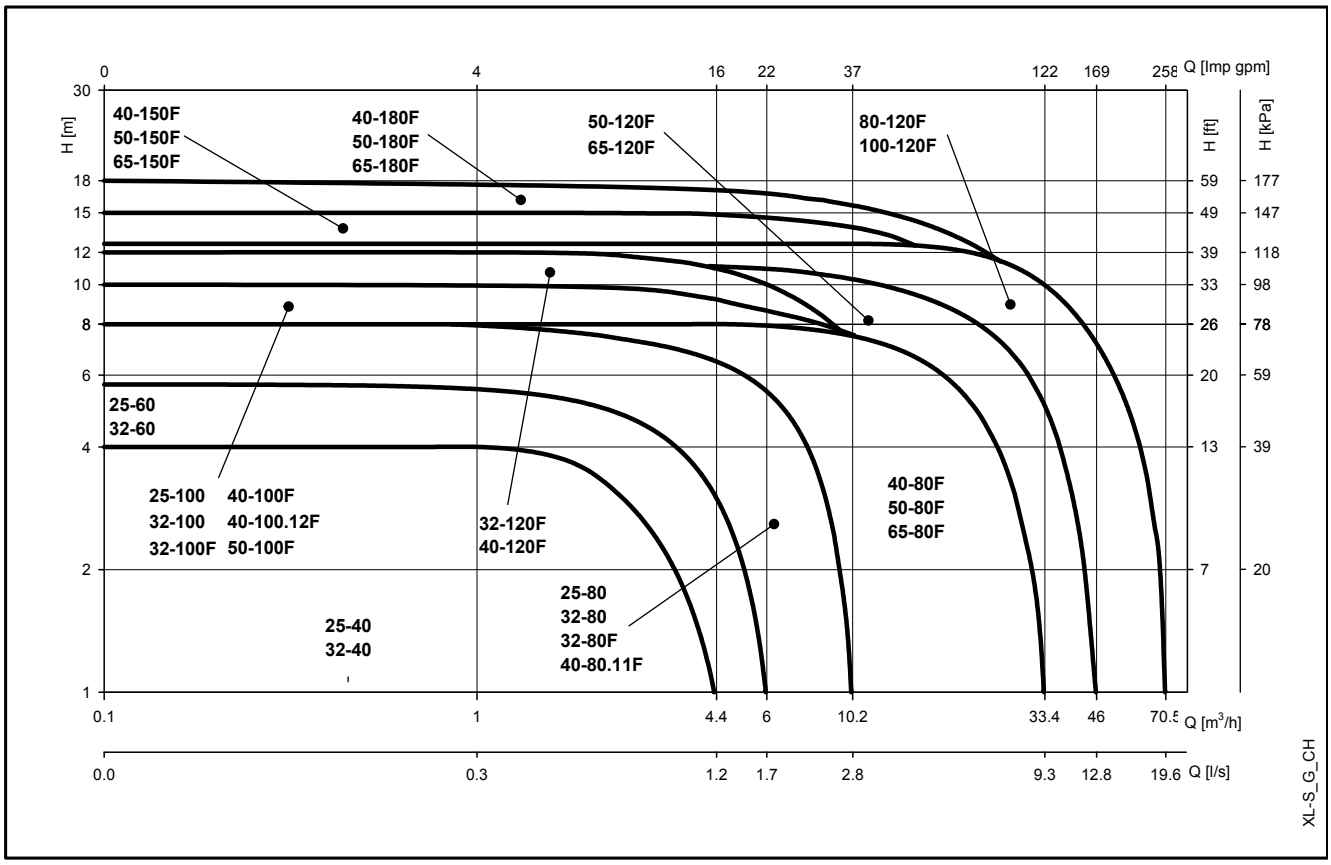

ecocirc XL-XLplus D (single operation)

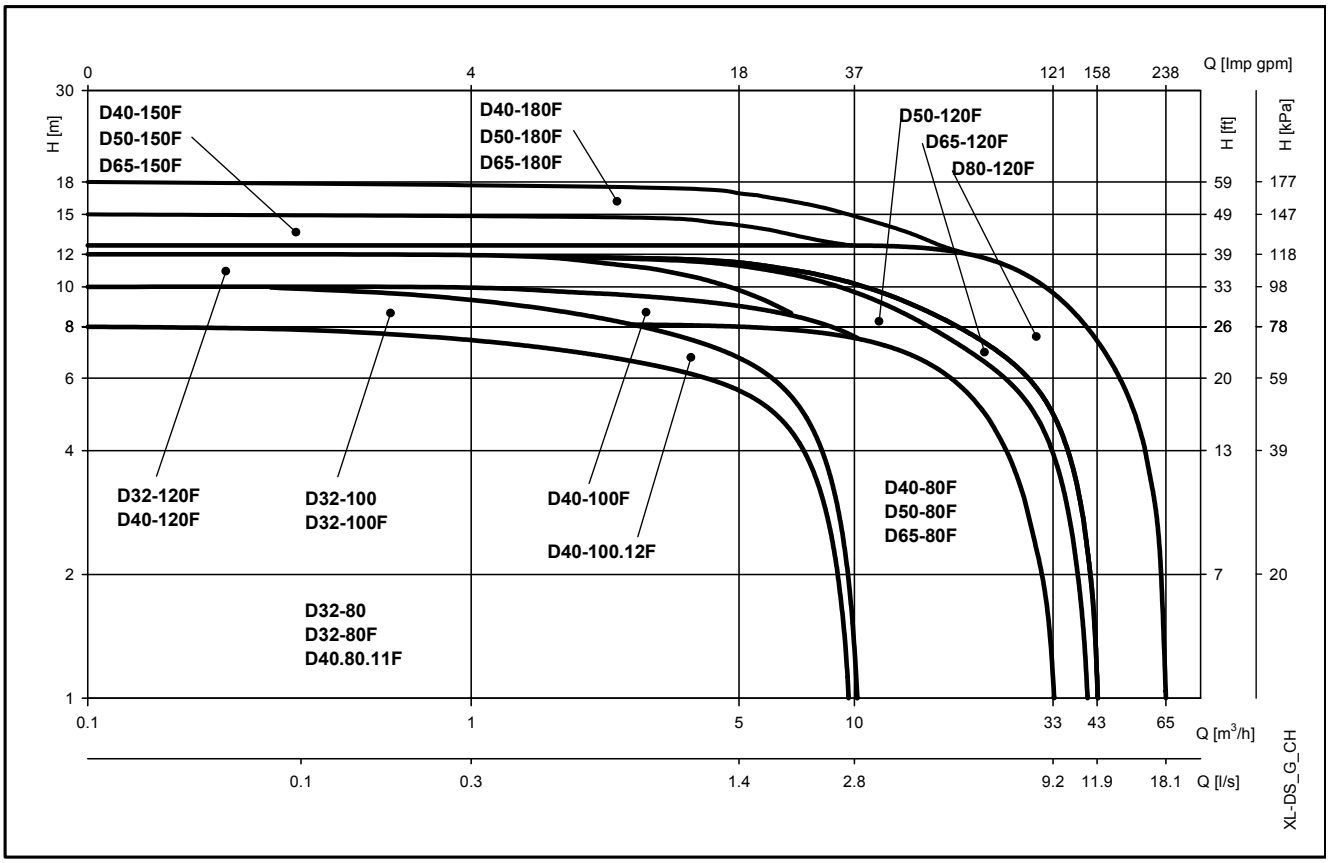

ecocirc XL-XLplus D (parallel operation)

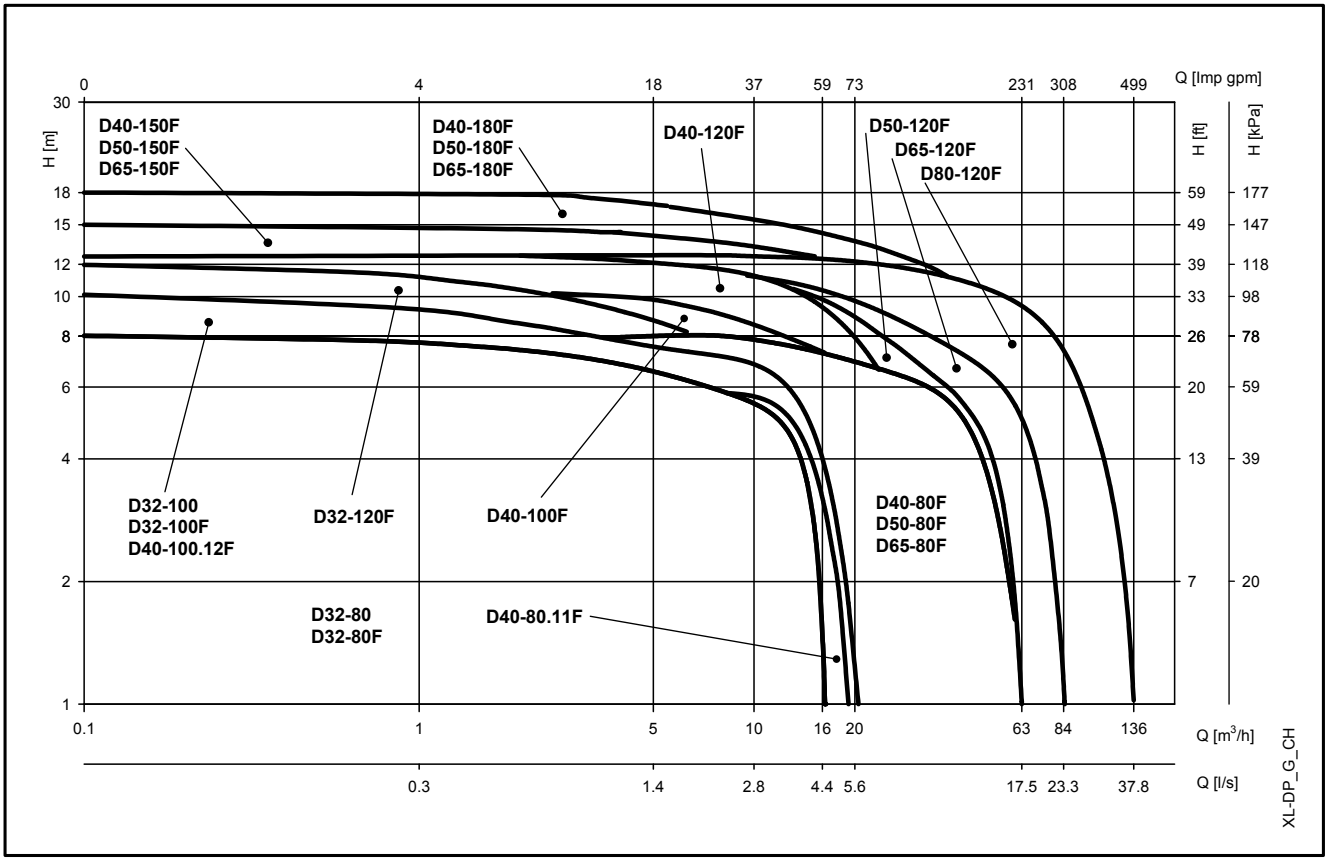

Performance curves

The curves shown in the next pages represent average values and cannot be used as guarantee.
For requirements related to specific minimum performances a specific measurement is necessary.

EEI according to EN 16297.

ecocirc XL-XLplus 25-40 (N)

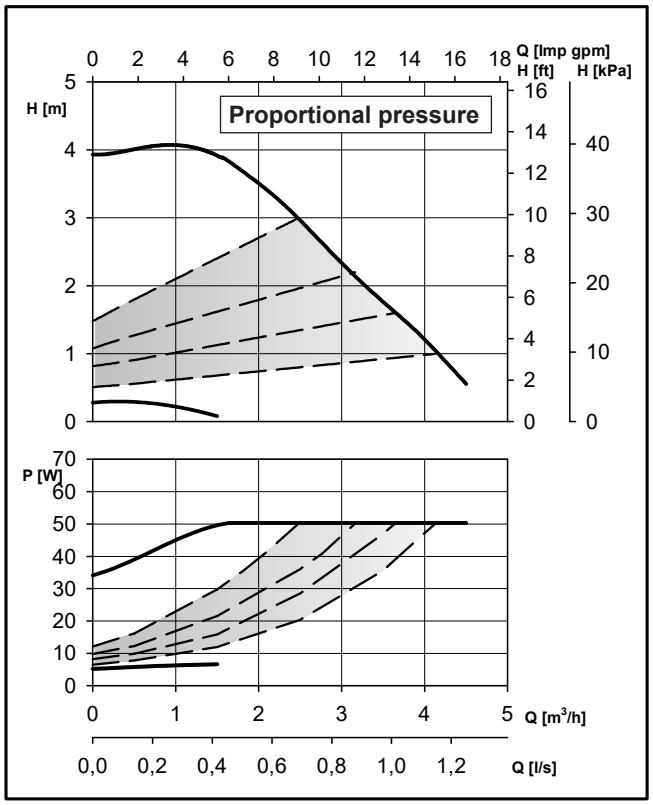

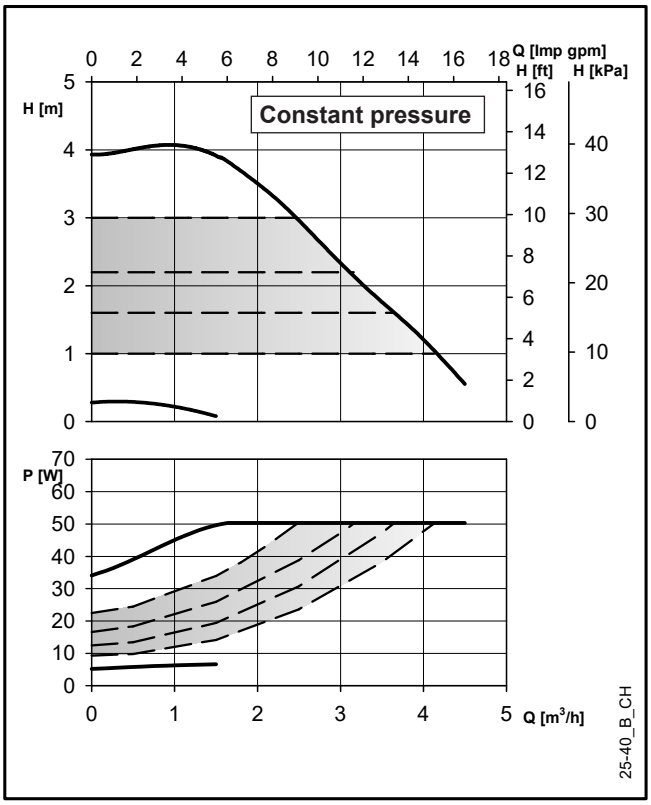

These performances are valid for liquids with density ρ = 1.0 Kg/dm³ and kinematic viscosity ν = 1 mm²/sec.

ecocirc XL-XLplus 25-40 (N)		Pump Data	
Rated voltage	1 x 230 V ±10%	IP protection	44
Frequency	50/60 Hz	Insulation class	155 (F)
Power absorbed [**W**] (min/max)	5 / 50	Max. working pressure	1,0 MPa (10 bar)
Input current [**A**] (min/max)	0,1 / 0,5	Liquid temperature	-10°C (14°F) to +110 °C (230°F)
Specific **EEI ≤**	0,23	Sound pressure level	≤ 38 dB(A)

En-Rev_B

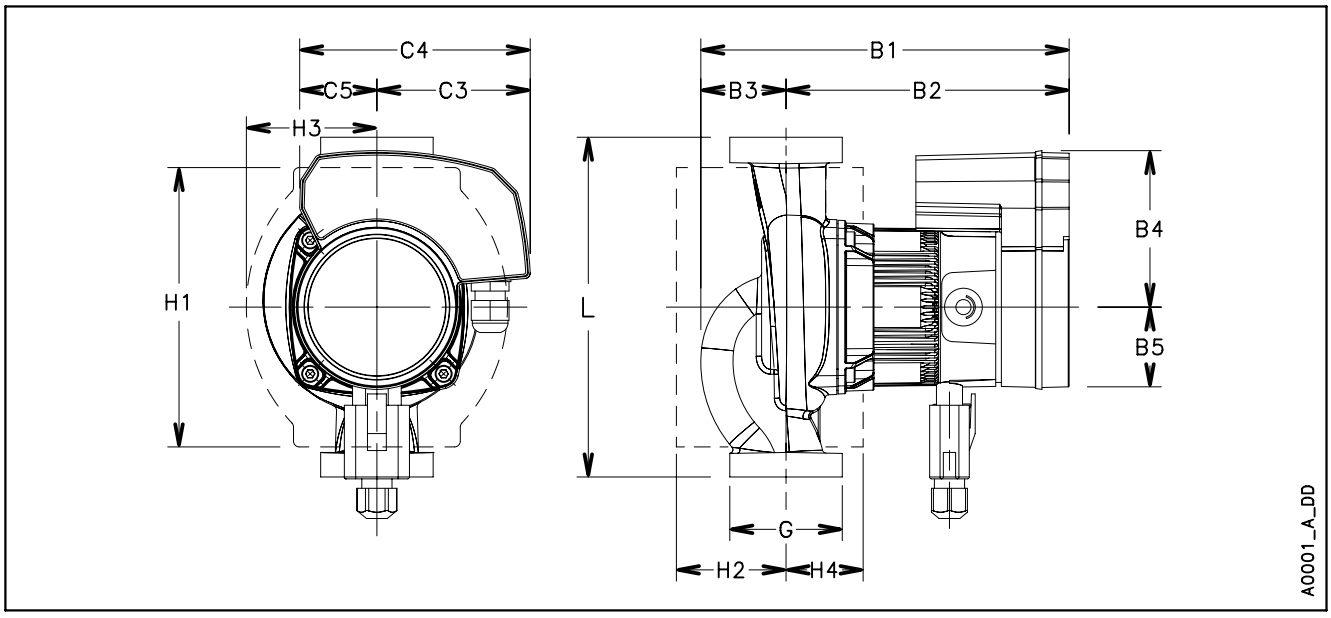

ecocirc XL-XLplus 25-40 (N)				Dimensions (mm)						**Net weight** 2,8 (Kg) **- Gross weight** 3,6 (Kg)			
L	**G**	**B1**	**B2**	**B3**	**B4**	**B5**	**C3**	**C4**	**C5**	**H1**	**H2**	**H3**	**H4**
180	G 1 ½ – Rp 1	191	145	46	83	43	81	120	39	148	59	74	40

En-Rev_A

ecocirc XL-XLplus 25-60 (N)

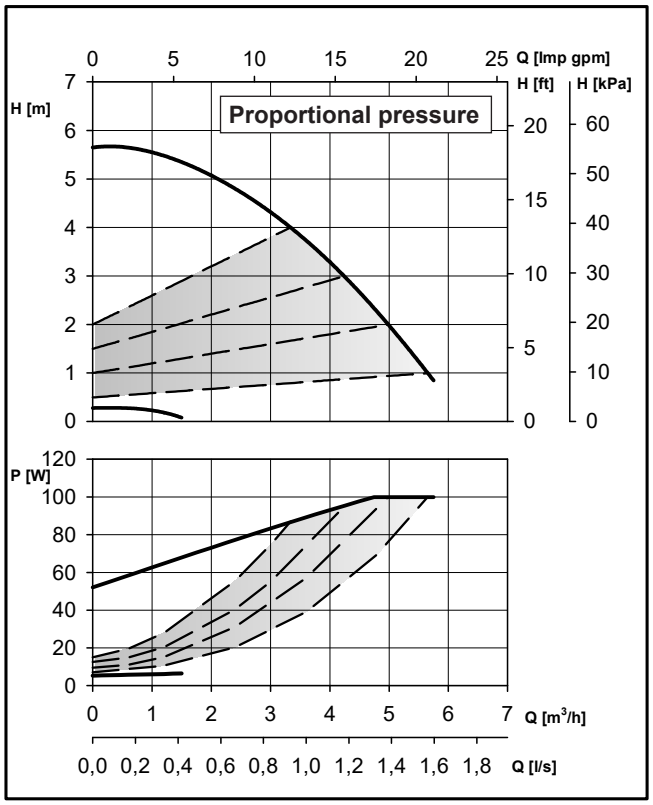

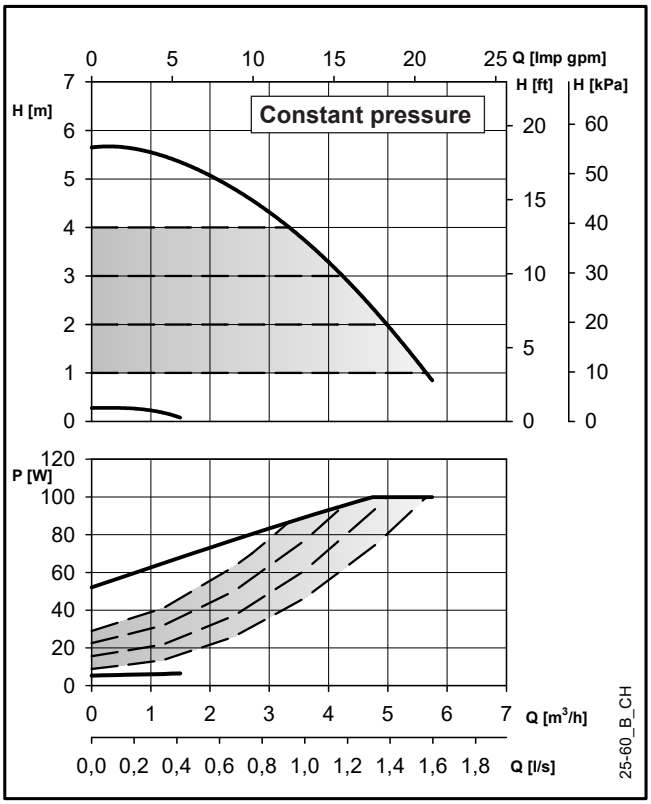

These performances are valid for liquids with density ρ = 1.0 Kg/dm³ and kinematic viscosity ν = 1 mm²/sec.

ecocirc XL-XLplus 25-60 (N)		Pump Data	
Rated voltage	1 x 230 V ±10%	IP protection	44
Frequency	50/60 Hz	Insulation class	155 (F)
Power absorbed [**W**] (min/max)	5 / 100	Max. working pressure	1,0 MPa (10 bar)
Input current [**A**] (min/max)	0,1 / 1,0	Liquid temperature	-10°C (14°F) to +110 °C (230°F)
Specific **EEI ≤**	0,23	Sound pressure level	≤ 38 dB(A)

En-Rev_B

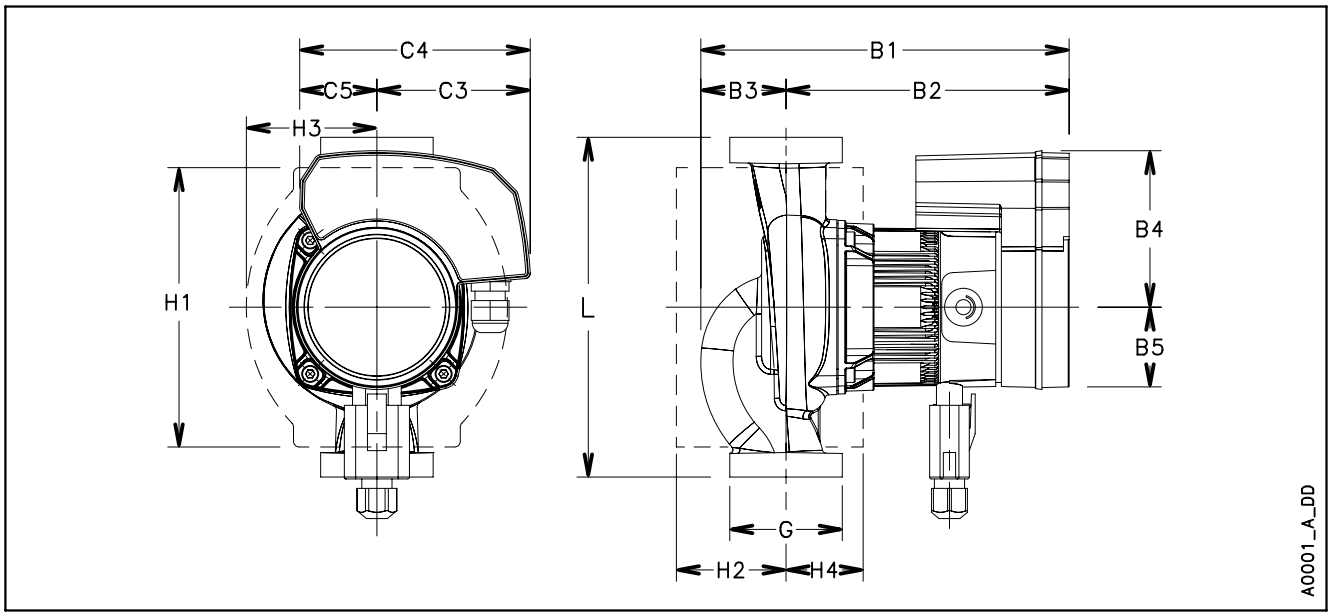

ecocirc XL-XLplus 25-60 (N)				Dimensions (mm)							**Net weight** 2,8 (Kg) **- Gross weight** 3,6 (Kg)		
L	**G**	**B1**	**B2**	**B3**	**B4**	**B5**	**C3**	**C4**	**C5**	**H1**	**H2**	**H3**	**H4**
180	G 1 ½ – Rp 1	191	145	46	83	43	81	120	39	148	59	74	40

En-Rev_A

ecocirc XL-XLplus 25-80

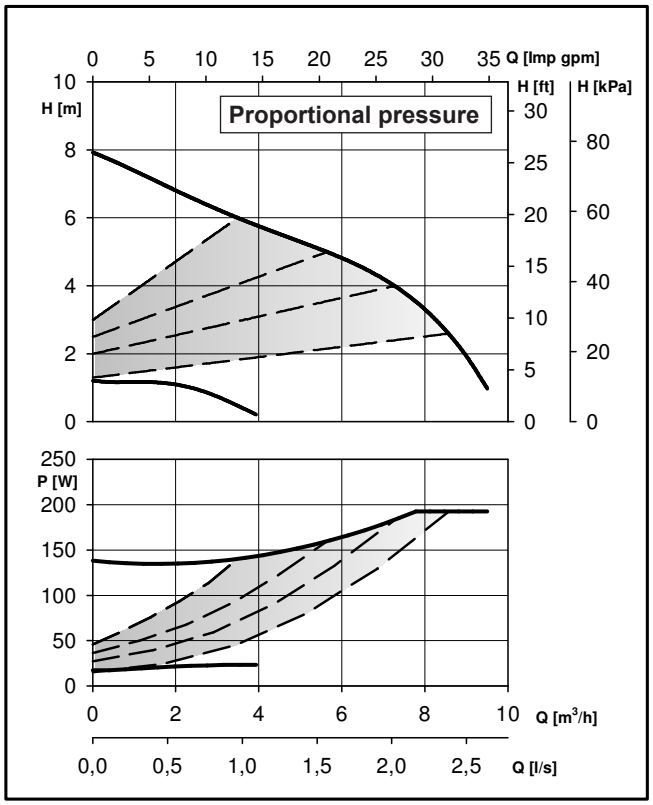

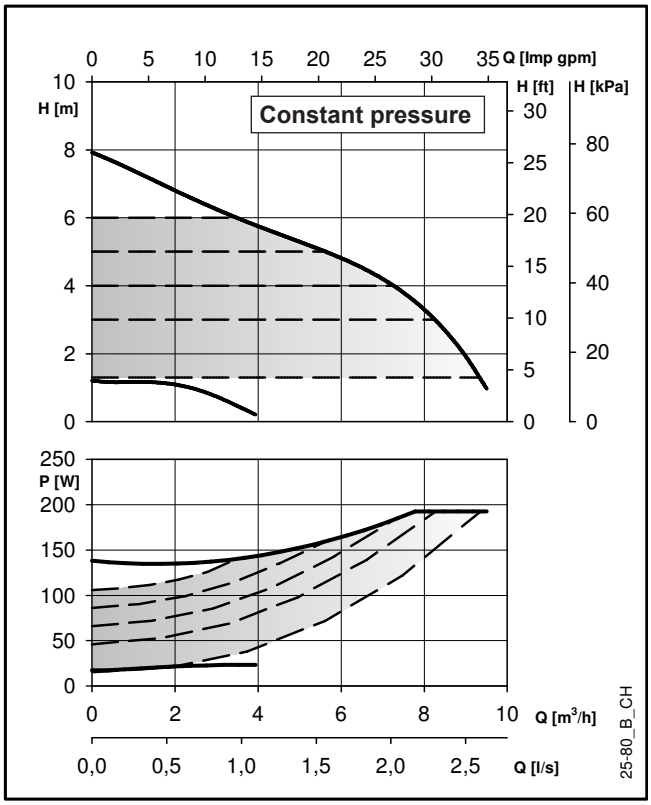

These performances are valid for liquids with density ρ = 1.0 Kg/dm³ and kinematic viscosity ν = 1 mm²/sec.

ecocirc XL-XLplus 25-80		Pump Data	
Rated voltage	1 x 230 V ±10%	IP protection	44
Frequency	50/60 Hz	Insulation class	155 (F)
Power absorbed [**W**] (min/max)	17 / 193	Max. working pressure	1,0 MPa (10 bar)
Input current [**A**] (min/max)	0,2 / 1,4	Liquid temperature	-10°C (14°F) to +110 °C (230°F)
Specific **EEI ≤**	0,23	Sound pressure level	≤ 45 dB(A)

En-Rev_D

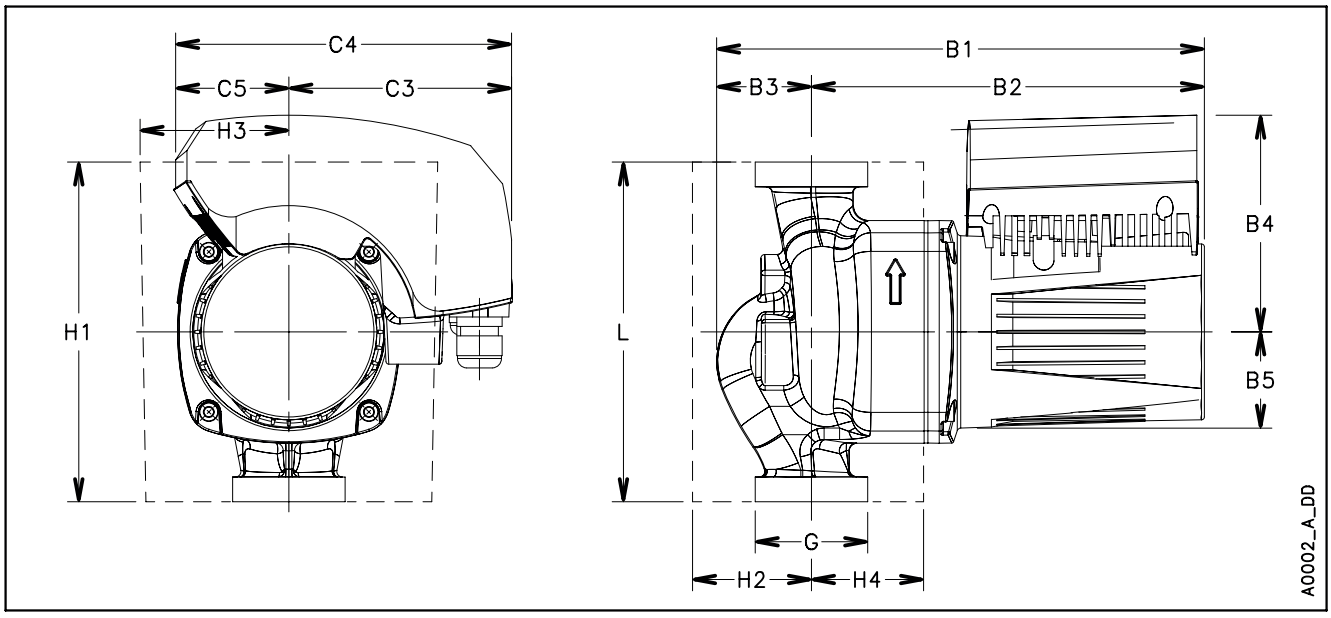

ecocirc XL-XLplus 25-80				Dimensions (mm)						**Net weight** 7 (Kg) **- Gross weight** 10,5 (Kg)			
L	**G**	**B1**	**B2**	**B3**	**B4**	**B5**	**C3**	**C4**	**C5**	**H1**	**H2**	**H3**	**H4**
180	G 1 ½ – Rp 1	260	205	55	118	51	116	178	62	180	70	83	55

En-Rev_A

ecocirc XL-XLplus 25-100

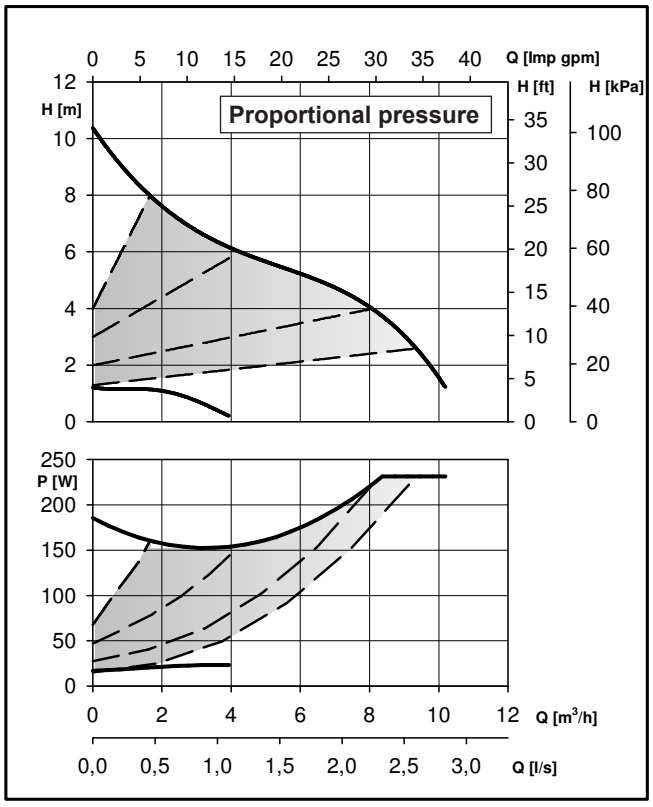

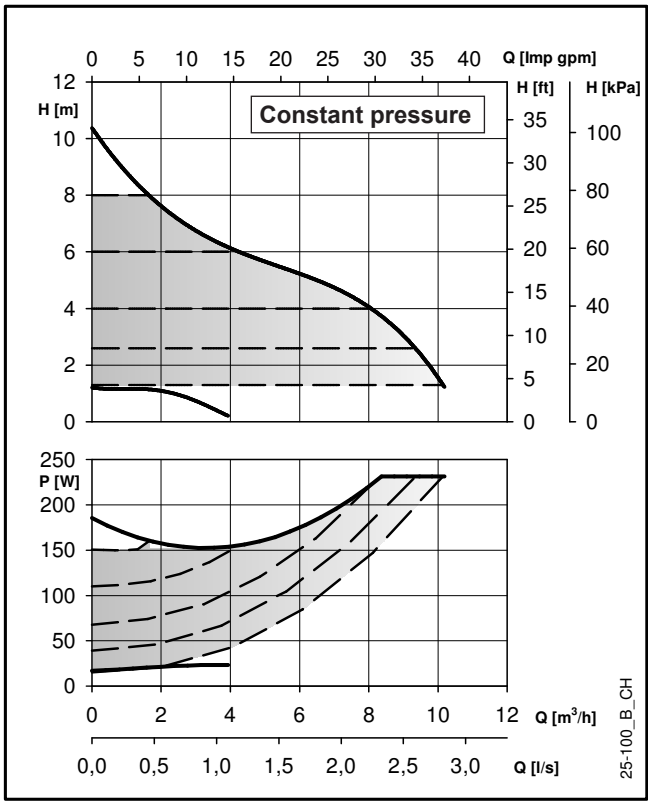

These performances are valid for liquids with density ρ = 1.0 Kg/dm³ and kinematic viscosity ν = 1 mm²/sec.

ecocirc XL-XLplus 25-100		Pump Data	
Rated voltage	1 x 230 V ±10%	IP protection	44
Frequency	50/60 Hz	Insulation class	155 (F)
Power absorbed [**W**] (min/max)	17 / 231	Max. working pressure	1,0 MPa (10 bar)
Input current [**A**] (min/max)	0,2 / 1,7	Liquid temperature	-10°C (14°F) to +110 °C (230°F)
Specific **EEI ≤**	0,23	Sound pressure level	≤ 45 dB(A)

En-Rev_D

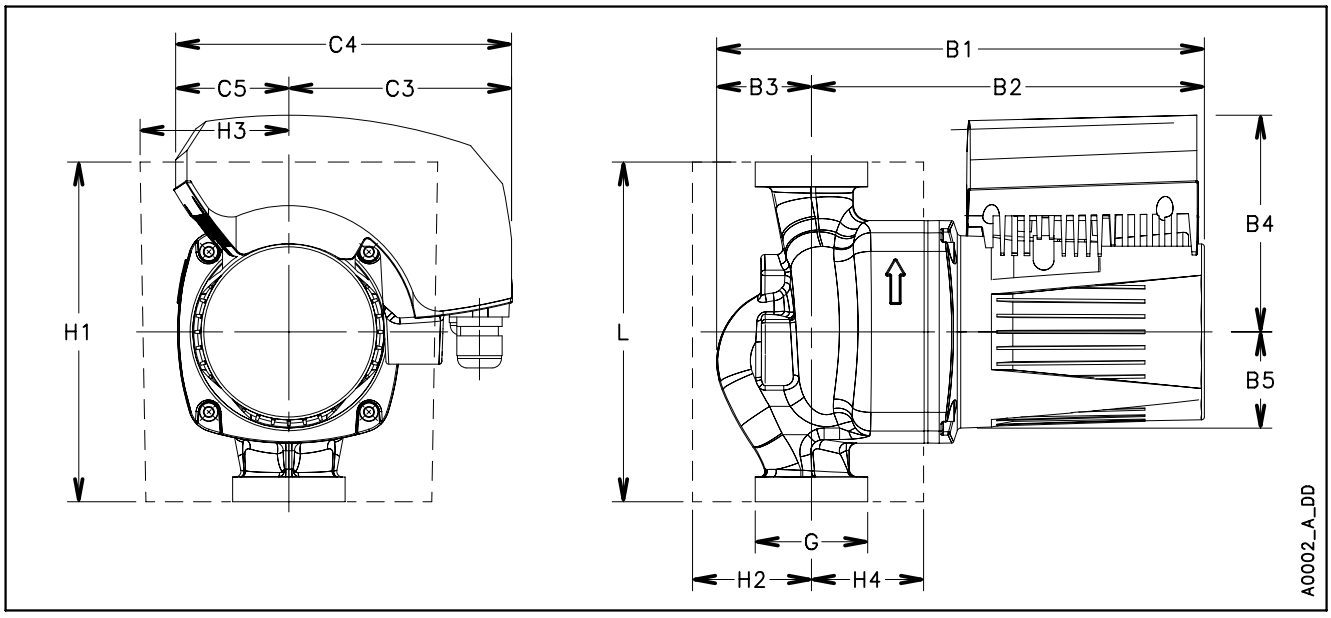

ecocirc XL-XLplus 25-100				Dimensions (mm)							Net weight 7 (Kg) - Gross weight 10,5 (Kg)		
L	**G**	**B1**	**B2**	**B3**	**B4**	**B5**	**C3**	**C4**	**C5**	**H1**	**H2**	**H3**	**H4**
180	G 1 ½ – Rp 1	260	205	55	118	51	116	178	62	180	70	83	55

En-Rev_A

ecocirc XL-XLplus 32-40 (N)

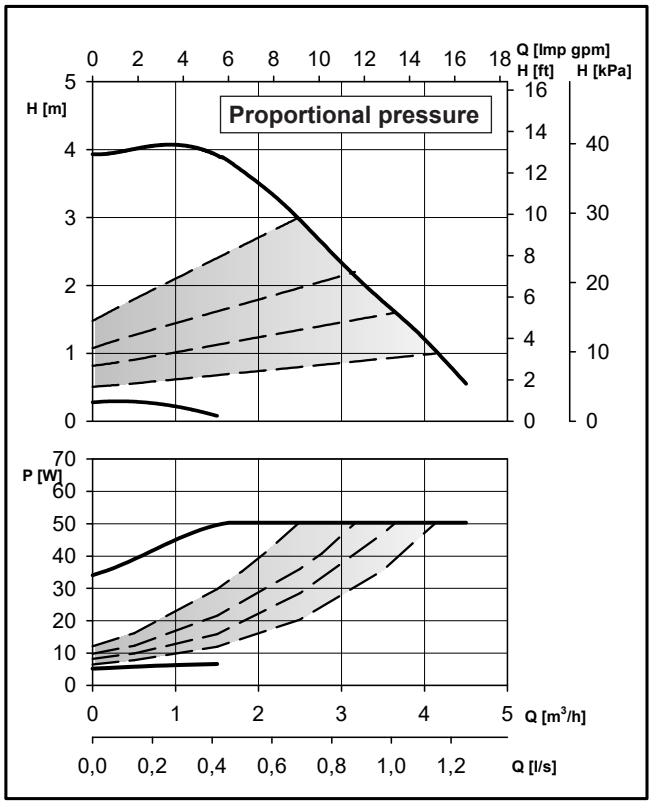

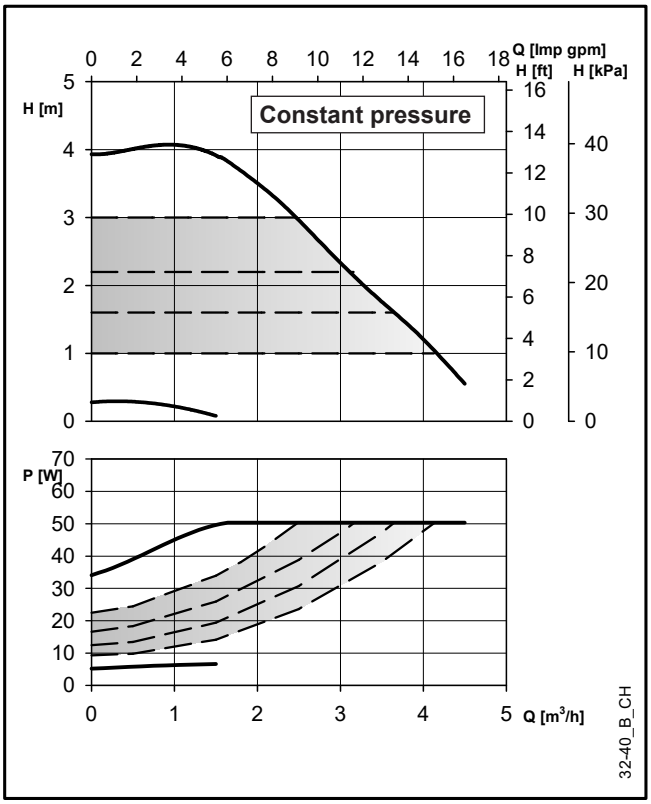

These performances are valid for liquids with density ρ = 1.0 Kg/dm³ and kinematic viscosity ν = 1 mm²/sec.

ecocirc XL-XLplus 32-40 (N)		Pump Data	
Rated voltage	1 x 230 V ±10%	IP protection	44
Frequency	50/60 Hz	Insulation class	155 (F)
Power absorbed [**W**] (min/max)	5 / 50	Max. working pressure	1,0 MPa (10 bar)
Input current [**A**] (min/max)	0,1 / 0,5	Liquid temperature	-10°C (14°F) to +110 °C (230°F)
Specific **EEI ≤**	0,23	Sound pressure level	≤ 38 dB(A)

En-Rev_B

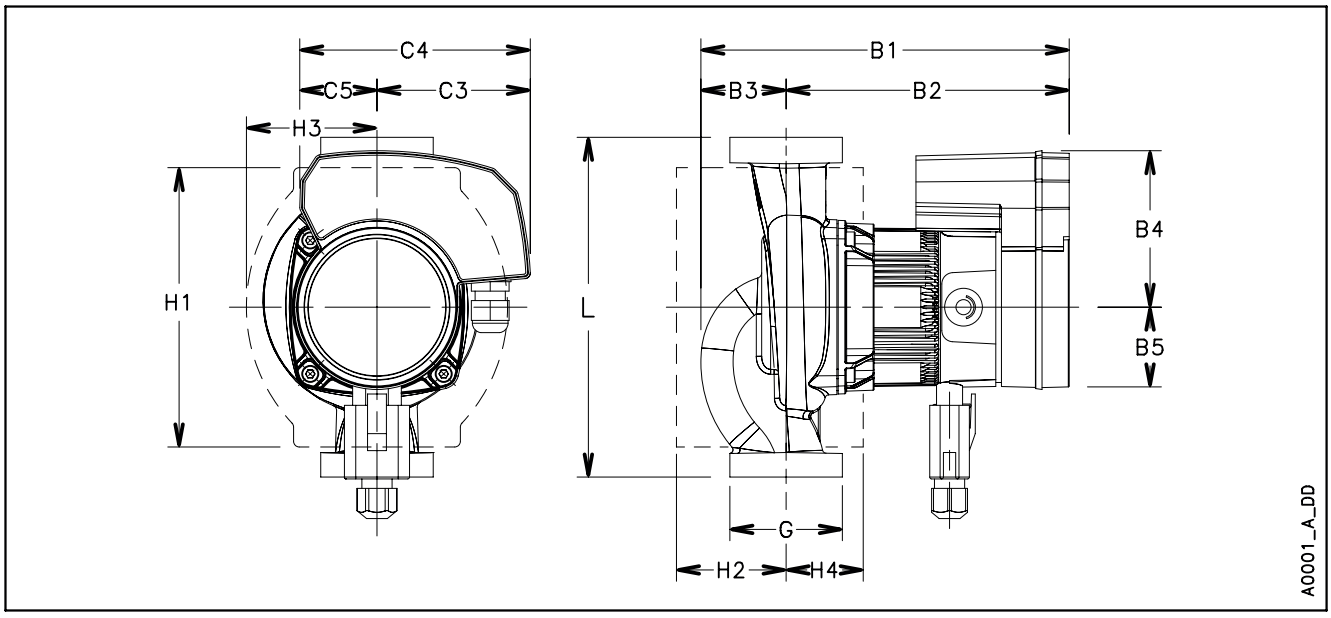

ecocirc XL-XLplus 32-40 (N)				Dimensions (mm)						**Net weight** 3,0 (Kg) **- Gross weight** 3,9 (Kg)			
L	**G**	**B1**	**B2**	**B3**	**B4**	**B5**	**C3**	**C4**	**C5**	**H1**	**H2**	**H3**	**H4**
180	G 2 – Rp 1 ¼	191	145	46	83	43	81	120	39	148	59	74	40

En-Rev_A

ecocirc XL-XLplus 32-60 (N)

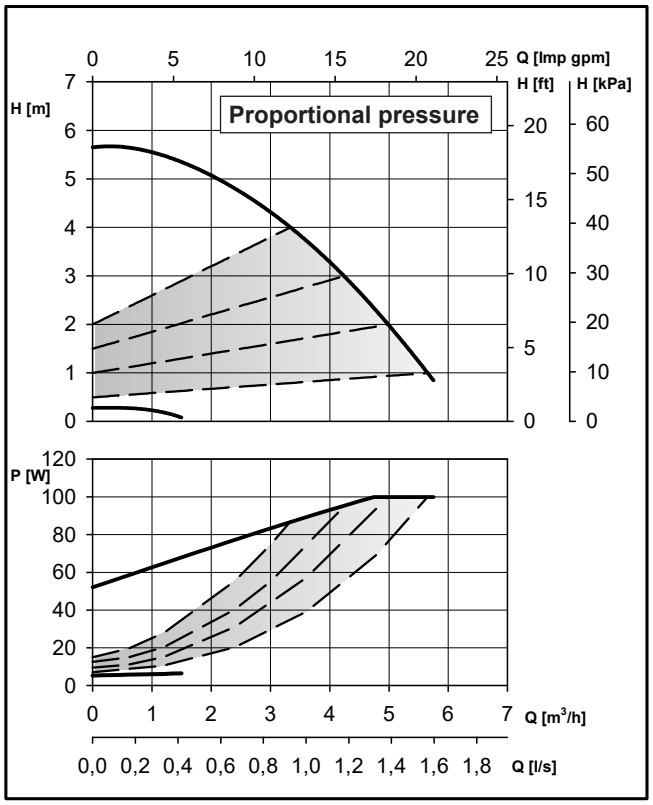

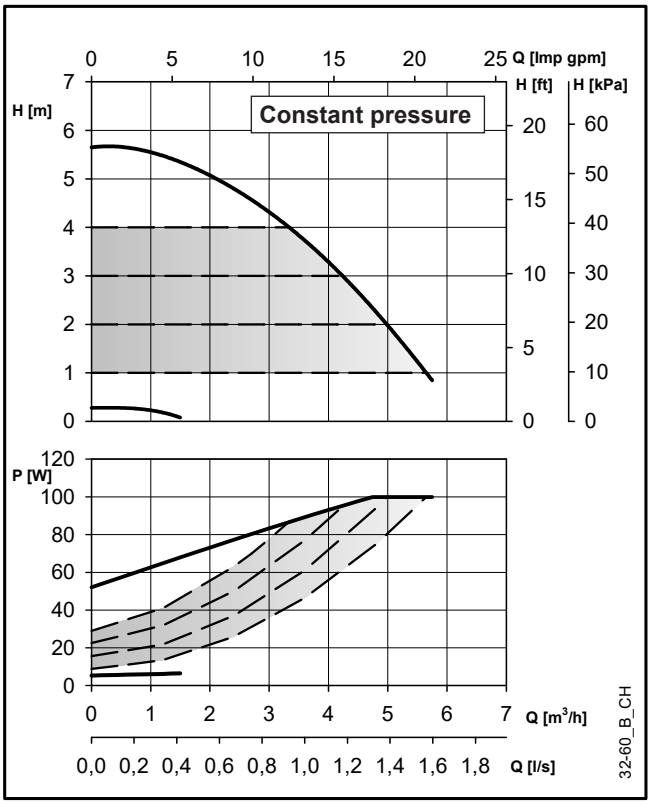

These performances are valid for liquids with density ρ = 1.0 Kg/dm³ and kinematic viscosity ν = 1 mm²/sec.

ecocirc XL-XLplus 32-60 (N)		Pump Data	
Rated voltage	1 x 230 V ±10%	IP protection	44
Frequency	50/60 Hz	Insulation class	155 (F)
Power absorbed [**W**] (min/max)	5 / 100	Max. working pressure	1,0 MPa (10 bar)
Input current [**A**] (min/max)	0,1 / 1,0	Liquid temperature	-10°C (14°F) to +110 °C (230°F)
Specific **EEI ≤**	0,23	Sound pressure level	≤ 38 dB(A)

En-Rev_B

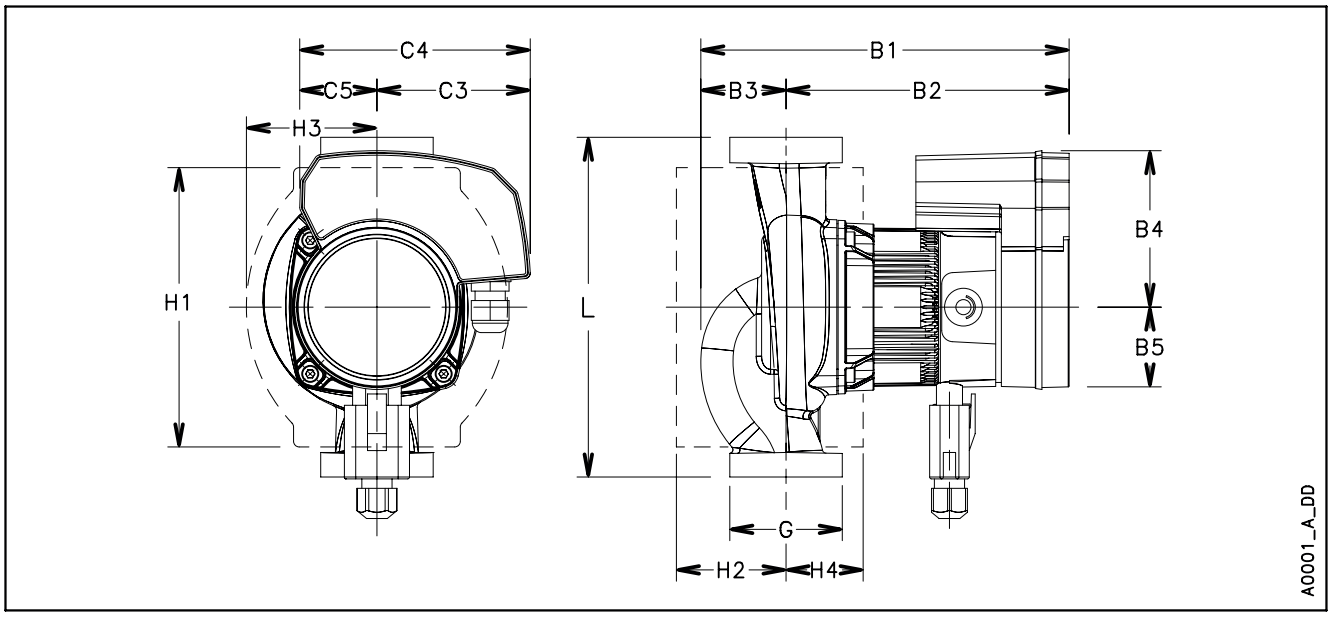

ecocirc XL-XLplus 32-60 (N)				Dimensions (mm)						Net weight 3,0 (Kg) - Gross weight 3,9 (Kg)			
L	**G**	**B1**	**B2**	**B3**	**B4**	**B5**	**C3**	**C4**	**C5**	**H1**	**H2**	**H3**	**H4**
180	G 2 – Rp 1 ¼	191	145	46	83	43	81	120	39	148	59	74	40

En-Rev_A

ecocirc XL-XLplus 32-80 (N)

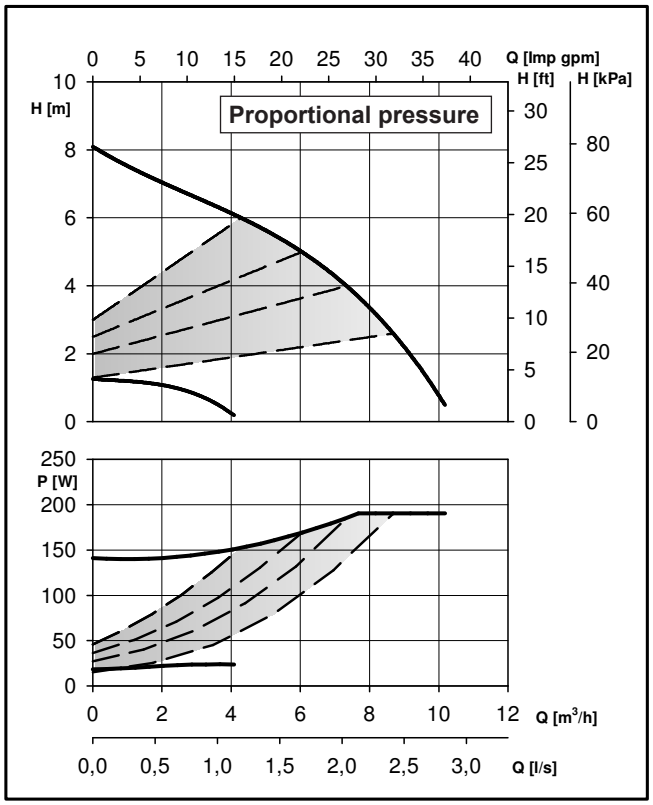

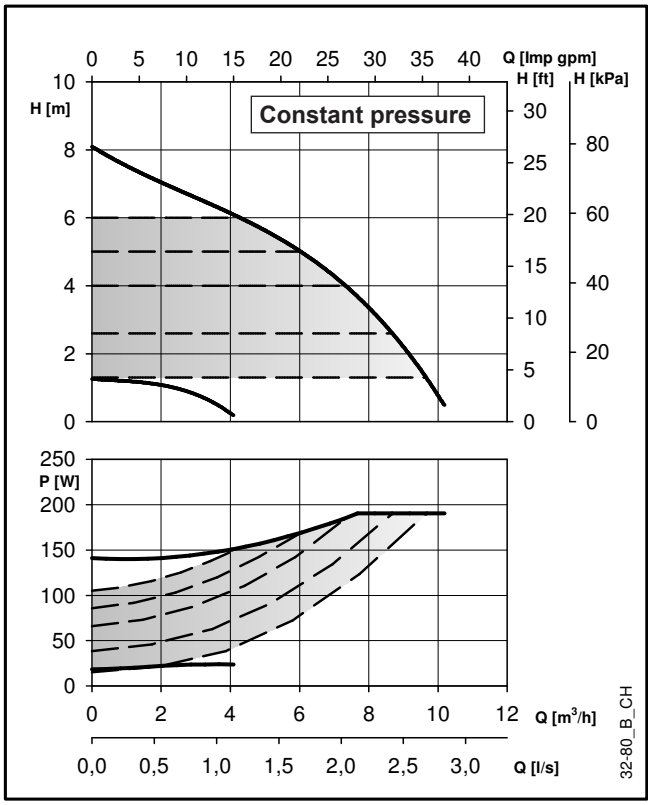

These performances are valid for liquids with density ρ = 1.0 Kg/dm³ and kinematic viscosity ν = 1 mm²/sec.

ecocirc XL-XLplus 32-80 (N)		Pump Data	
Rated voltage	1 x 230 V ±10%	IP protection	44
Frequency	50/60 Hz	Insulation class	155 (F)
Power absorbed [**W**] (min/max)	18 / 191	Max. working pressure	1,0 MPa (10 bar)
Input current [**A**] (min/max)	0,2 / 1,4	Liquid temperature	-10°C (14°F) to +110 °C (230°F)
Specific **EEI ≤**	0,23	Sound pressure level	≤ 45 dB(A)

En-Rev_F

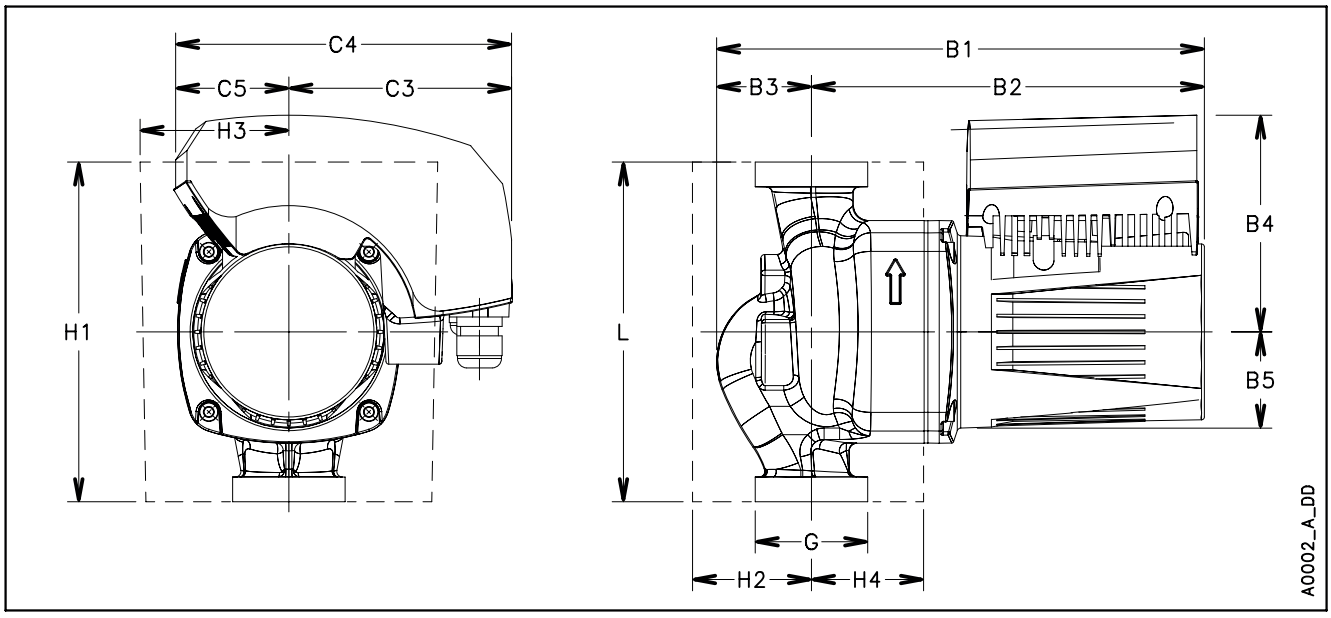

ecocirc XL-XLplus 32-80 (N)				Dimensions (mm)						Net weight 7,3 (Kg) - Gross weight 10,8 (Kg)			
L	**G**	**B1**	**B2**	**B3**	**B4**	**B5**	**C3**	**C4**	**C5**	**H1**	**H2**	**H3**	**H4**
180	G 2 – Rp 1 ¼	260	208	52	118	51	116	178	62	180	67	83	58

En-Rev_C

ecocirc XL-XLplus 32-100 (N)

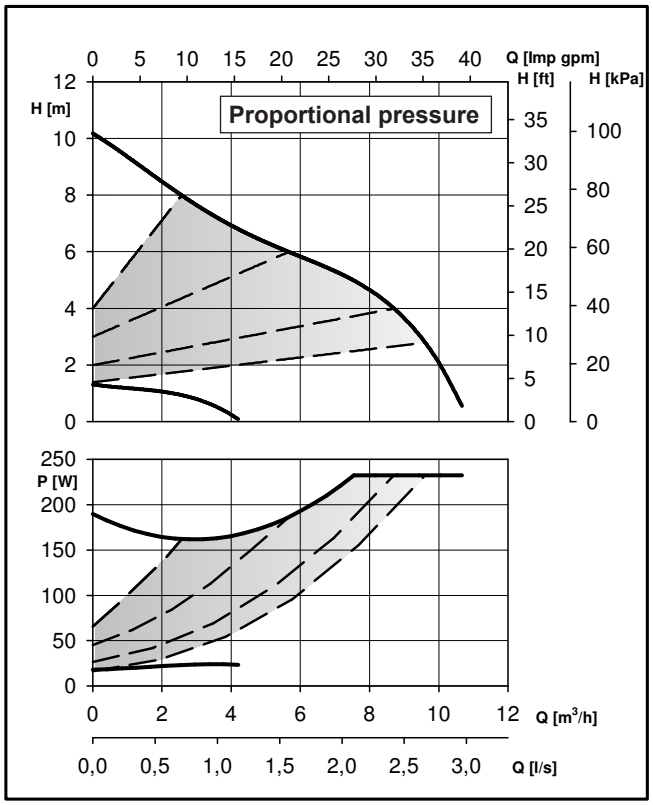

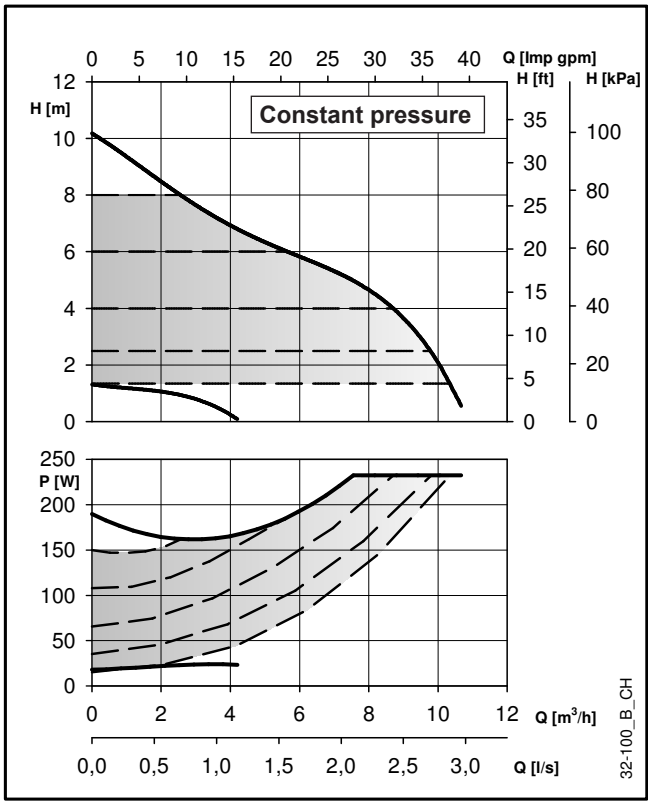

These performances are valid for liquids with density ρ = 1.0 Kg/dm³ and kinematic viscosity ν = 1 mm²/sec.

ecocirc XL-XLplus 32-100 (N)		Pump Data	
Rated voltage	1 x 230 V ±10%	IP protection	44
Frequency	50/60 Hz	Insulation class	155 (F)
Power absorbed [**W**] (min/max)	18 / 233	Max. working pressure	1,0 MPa (10 bar)
Input current [**A**] (min/max)	0,2 / 1,7	Liquid temperature	-10°C (14°F) to +110 °C (230°F)
Specific **EEI ≤**	0,23	Sound pressure level	≤ 45 dB(A)

En-Rev_F

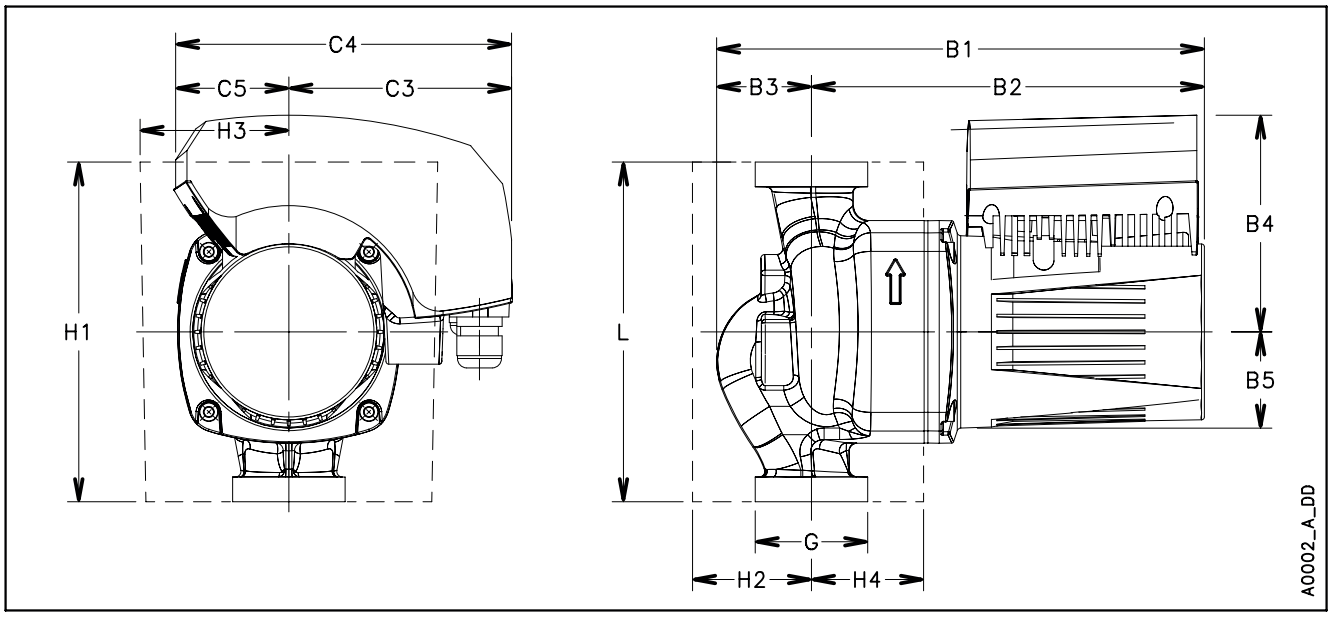

ecocirc XL-XLplus 32-100 (N)				Dimensions (mm)						Net weight 7,3 (Kg) - Gross weight 10,8 (Kg)			
L	**G**	**B1**	**B2**	**B3**	**B4**	**B5**	**C3**	**C4**	**C5**	**H1**	**H2**	**H3**	**H4**
180	G 2 – Rp 1 ¼	260	208	52	118	51	116	178	62	180	67	83	58

En-Rev_C

ecocirc XL-XLplus 32-80 F

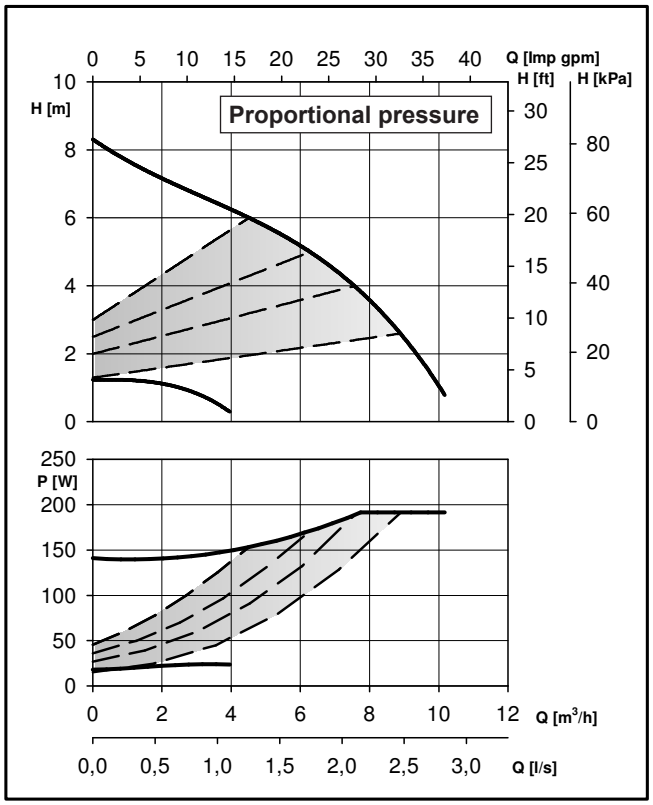

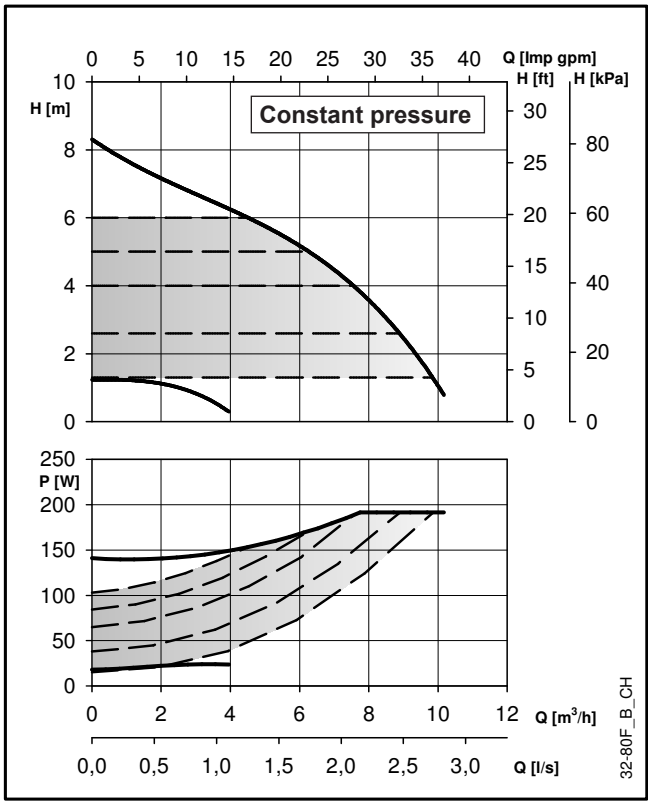

These performances are valid for liquids with density ρ = 1.0 Kg/dm³ and kinematic viscosity ν = 1 mm²/sec.

ecocirc XL-XLplus 32-80 F		Pump Data	
Rated voltage	1 x 230 V ±10%	IP protection	44
Frequency	50/60 Hz	Insulation class	155 (F)
Power absorbed [**W**] (min/max)	18 / 192	Max. working pressure	1,0 MPa (10 bar)
Input current [**A**] (min/max)	0,2 / 1,4	Liquid temperature	-10°C (14°F) to +110 °C (230°F)
Specific **EEI ≤**	0,23	Sound pressure level	≤ 45 dB(A)

En-Rev_D

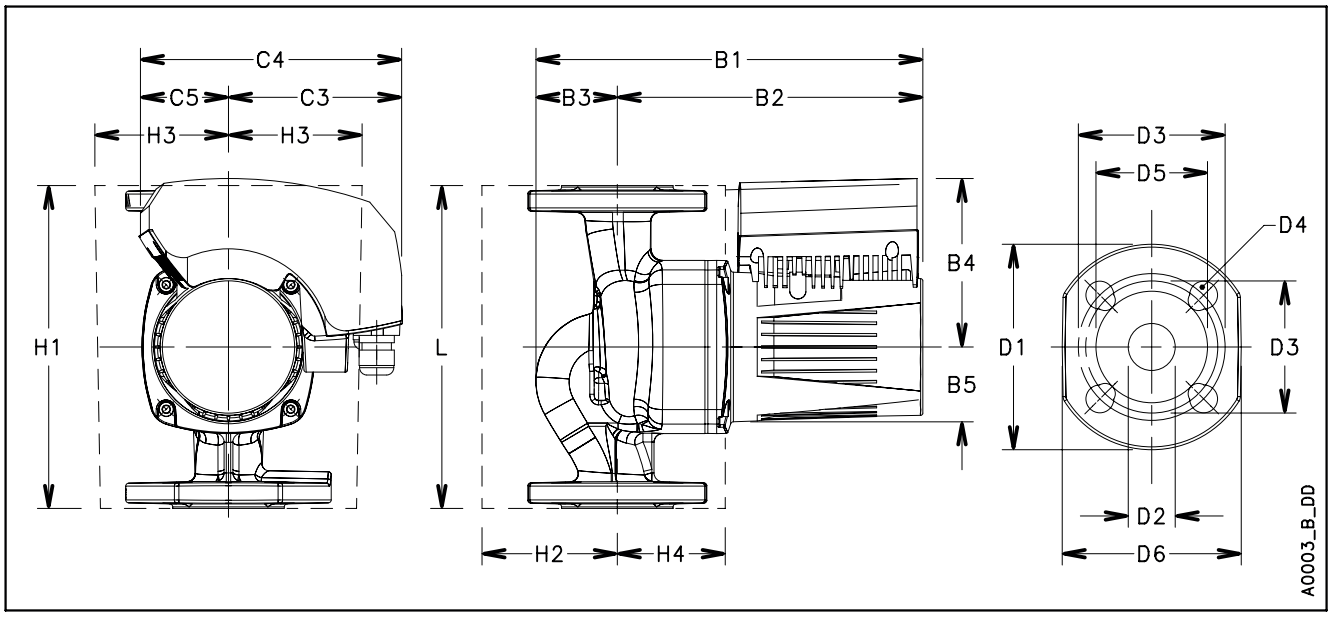

ecocirc XL-XLplus 32-80 F							Dimensions (mm)										**Net weight** 9,8 (Kg) **- Gross weight** 13,3 (Kg)	
L	**G**	**B1**	**B2**	**B3**	**B4**	**B5**	**C3**	**C4**	**C5**	**H1**	**H2**	**H3**	**H4**	**D1**	**D2**	**D3**	**D4**	**D5**
220	DN 32	266	208	58	118	51	116	178	62	220	94	96	76	140	32	90/100	4 x 14/19	76

En-Rev_A

ecocirc XL-XLplus 32-100 F

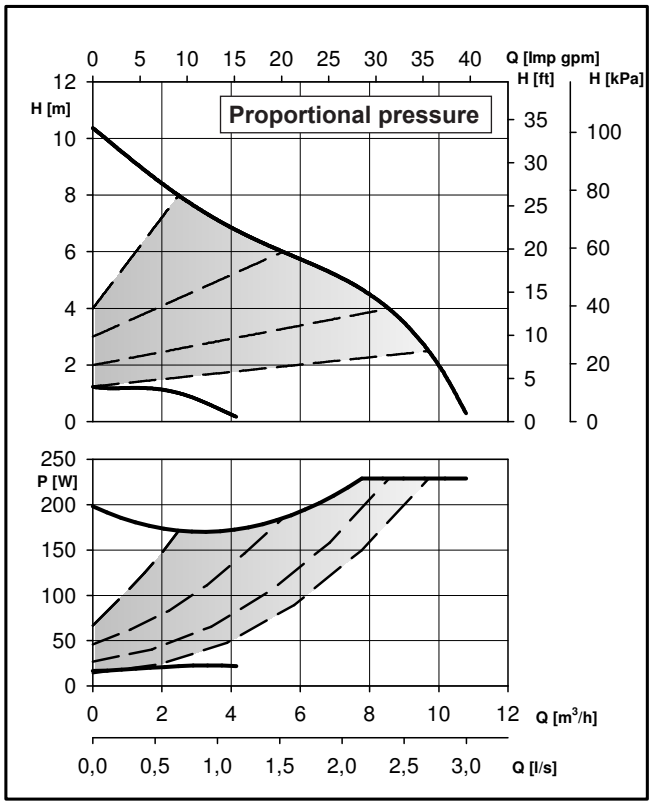

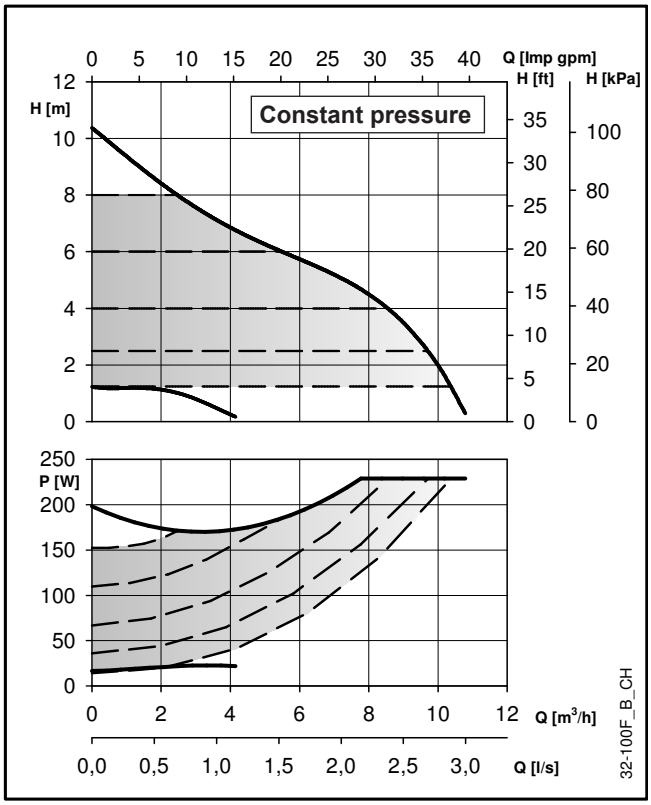

These performances are valid for liquids with density ρ = 1.0 Kg/dm³ and kinematic viscosity ν = 1 mm²/sec.

ecocirc XL-XLplus 32-100 F		Pump Data	
Rated voltage	1 x 230 V ±10%	IP protection	44
Frequency	50/60 Hz	Insulation class	155 (F)
Power absorbed [**W**] (min/max)	17 / 230	Max. working pressure	1,0 MPa (10 bar)
Input current [**A**] (min/max)	0,2 / 1,7	Liquid temperature	-10°C (14°F) to +110 °C (230°F)
Specific **EEI ≤**	0,23	Sound pressure level	≤ 45 dB(A)

En-Rev_D

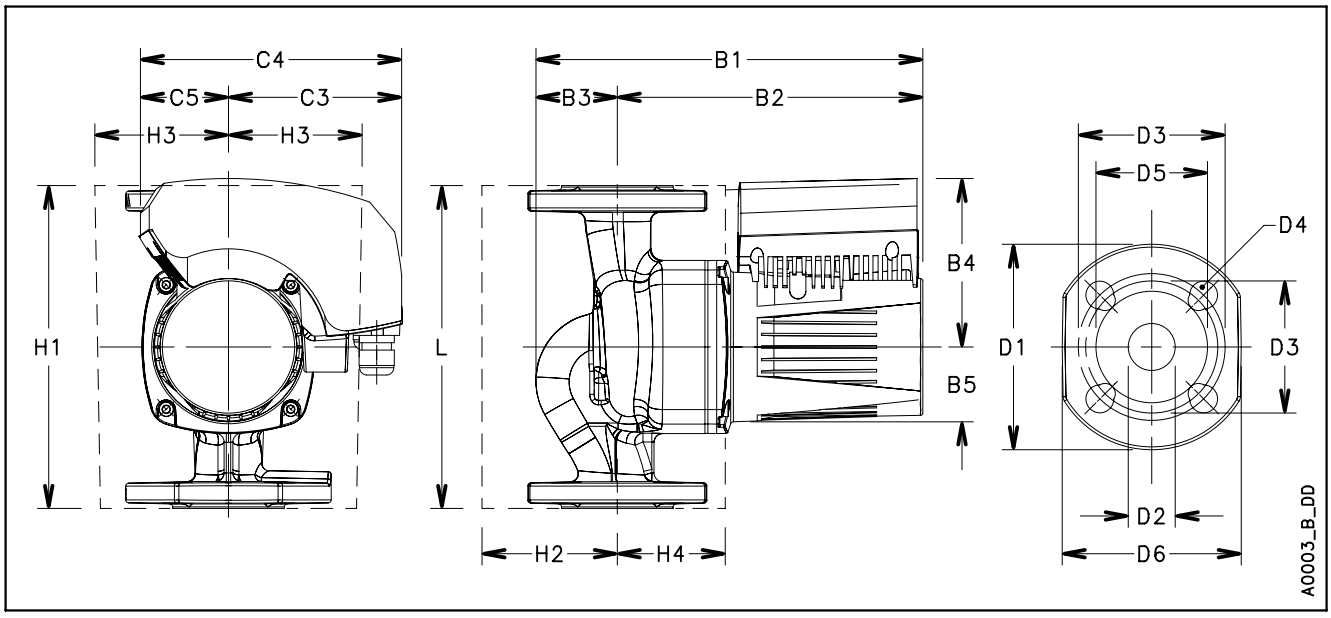

ecocirc XL-XLplus 32-100 F							Dimensions (mm)										Net weight 9,8 (Kg) - Gross weight 13,3 (Kg)	
L	**G**	**B1**	**B2**	**B3**	**B4**	**B5**	**C3**	**C4**	**C5**	**H1**	**H2**	**H3**	**H4**	**D1**	**D2**	**D3**	**D4**	**D5**
220	DN 32	266	208	58	118	51	116	178	62	220	94	96	76	140	32	90/100	4 x 14/19	76

En-Rev_A

ecocirc XL-XLplus 32-120 F (N)

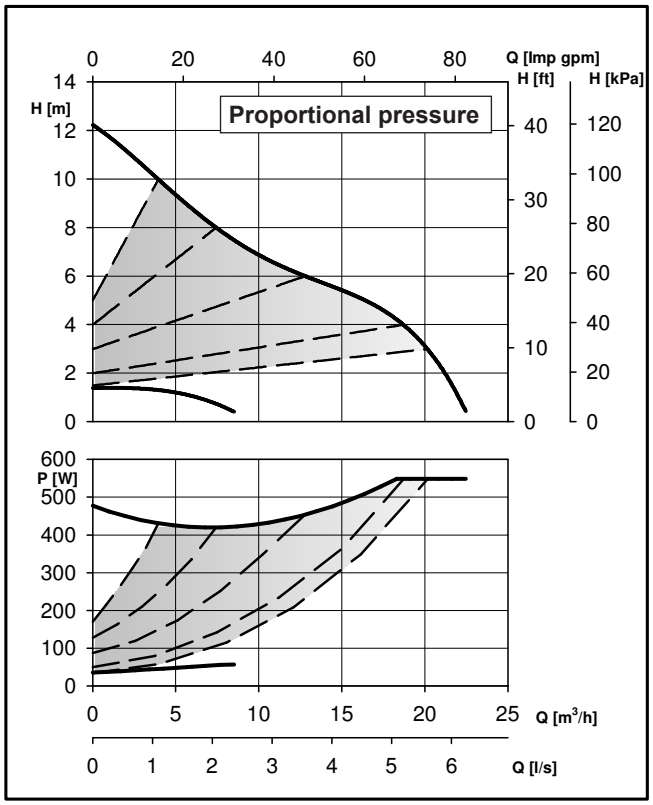

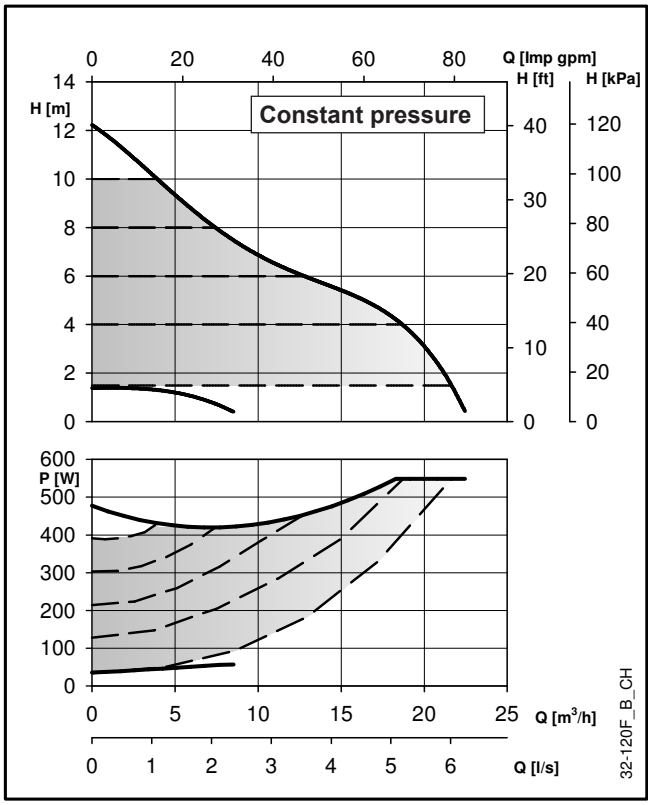

These performances are valid for liquids with density ρ = 1.0 Kg/dm³ and kinematic viscosity ν = 1 mm²/sec.

ecocirc XL-XLplus 32-120 F (N)		Pump Data	
Rated voltage	1 x 230 V ±10%	IP protection	44
Frequency	50/60 Hz	Insulation class	155 (F)
Power absorbed [**W**] (min/max)	36 / 549	Max. working pressure	1,0 MPa (10 bar)
Input current [**A**] (min/max)	0,2 / 2,4	Liquid temperature	-10°C (14°F) to +110 °C (230°F)
Specific **EEI ≤**	0,23	Sound pressure level	≤ 48 dB(A)

En-Rev_E

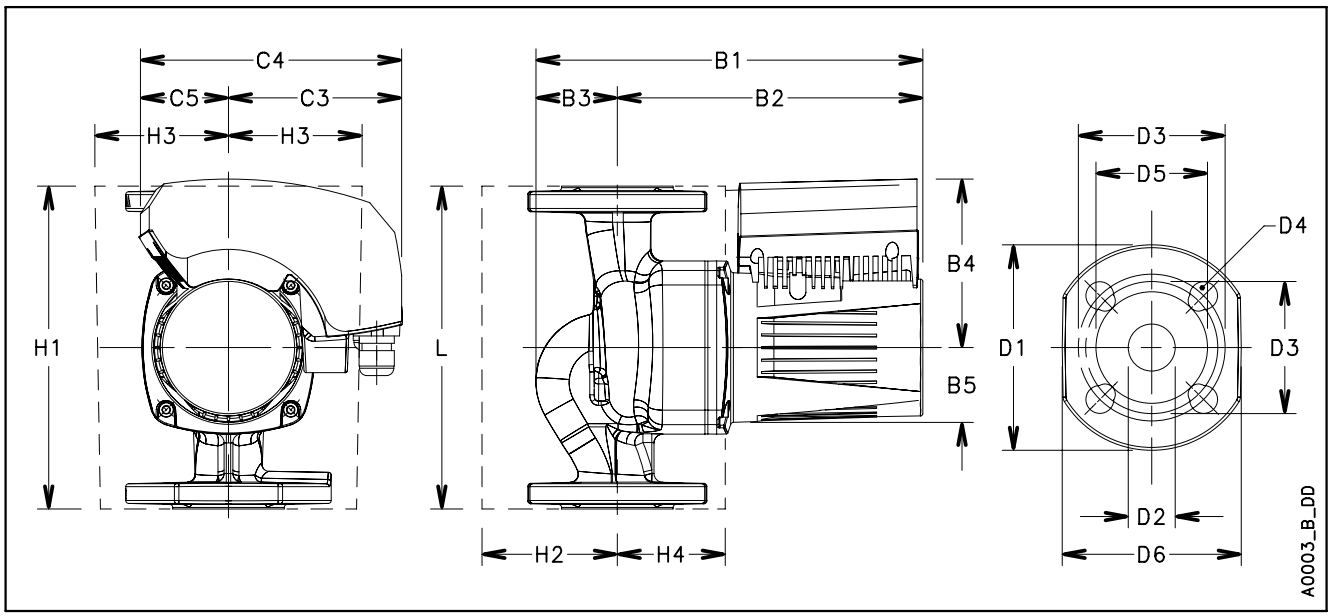

ecocirc XL-XLplus 32-120 F (N)										Dimensions (mm)							**Net weight** 13 (Kg) - **Gross weight** 16,8 (Kg)	
L	**G**	**B1**	**B2**	**B3**	**B4**	**B5**	**C3**	**C4**	**C5**	**H1**	**H2**	**H3**	**H4**	**D1**	**D2**	**D3**	**D4**	**D5**
220	DN 32	322	252	70	132	53	128	206	78	220	83	83	83	140	32	90/100	4 x 14/19	76

En-Rev_C

ecocirc XL 40-80.11 F

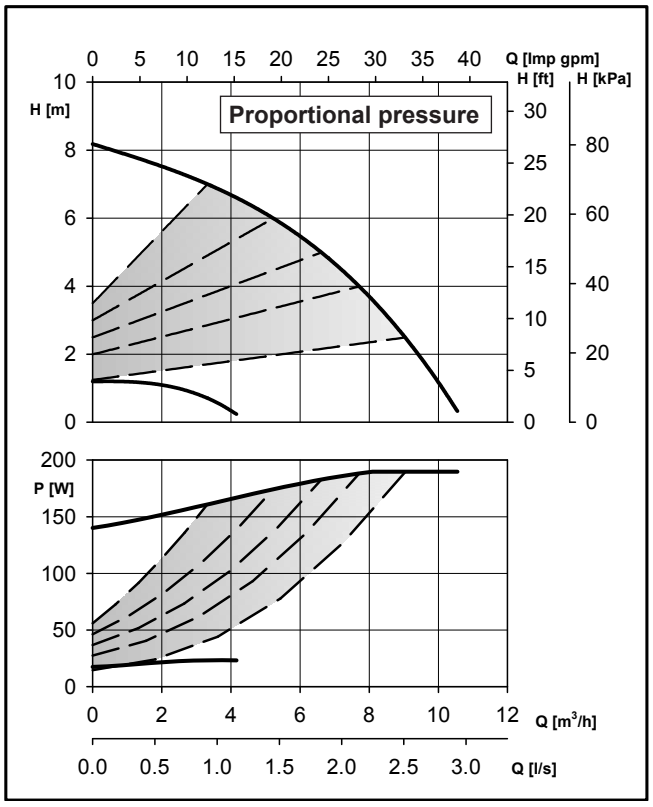

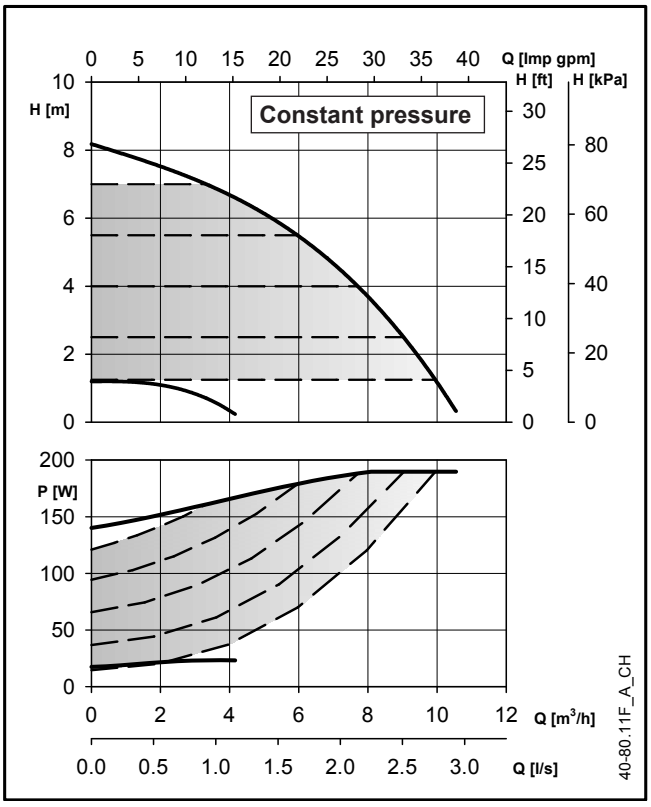

These performances are valid for liquids with density ρ = 1.0 Kg/dm³ and kinematic viscosity ν = 1 mm²/sec.

ecocirc XL 40-80.11 F		Pump Data	
Rated voltage	1 x 230 V ±10%	Insulation class	155 (F)
Frequency	50/60 Hz	Max. working pressure	1,0 MPa (10 bar)
Power absorbed [**W**] (min/max)	18 / 190	Liquid temperature	-10°C (14°F) to +110°C (230°F) for heating pumps
Input current [**A**] (min/max)	0,2 / 1,4		-10°C (14°F) to +85°C (185°F) for domestic hot water pumps
Specific **EEI ≤**	0,23	Sound pressure level	≤ 43 dB(A)
IP protection	44		

En-Rev_A

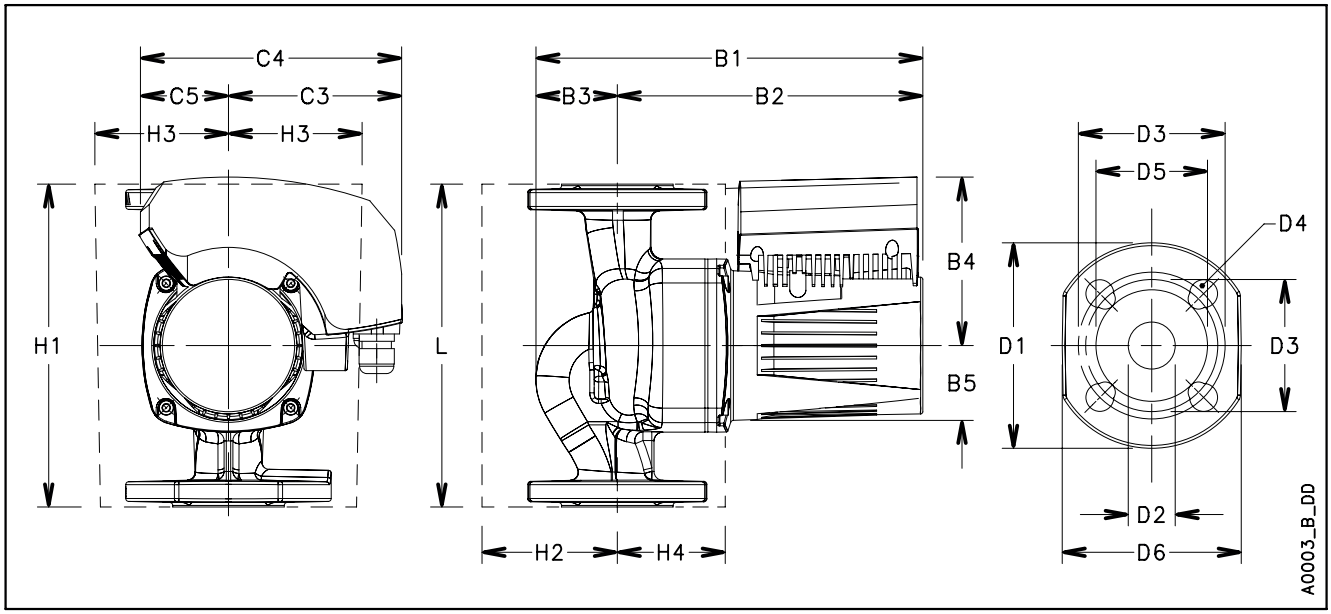

ecocirc XL 40-80.11 F							Dimensions (mm)										**Net weight** 10,7 (Kg) - **Gross weight** 14,2 (Kg)	
L	**G**	**B1**	**B2**	**B3**	**B4**	**B5**	**C3**	**C4**	**C5**	**H1**	**H2**	**H3**	**H4**	**D1**	**D2**	**D3**	**D4**	**D5**
220	DN 40	274	212	62	118	51	116	178	62	220	94	96	76	150	40	100/110	4 x 14/19	84

En-Rev_A

ecocirc XL-XLplus 40-80 F

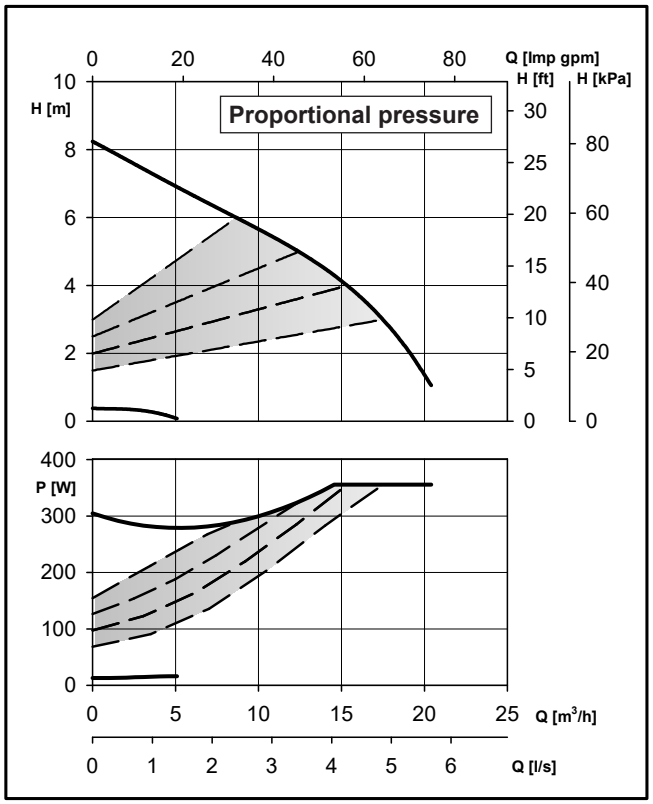

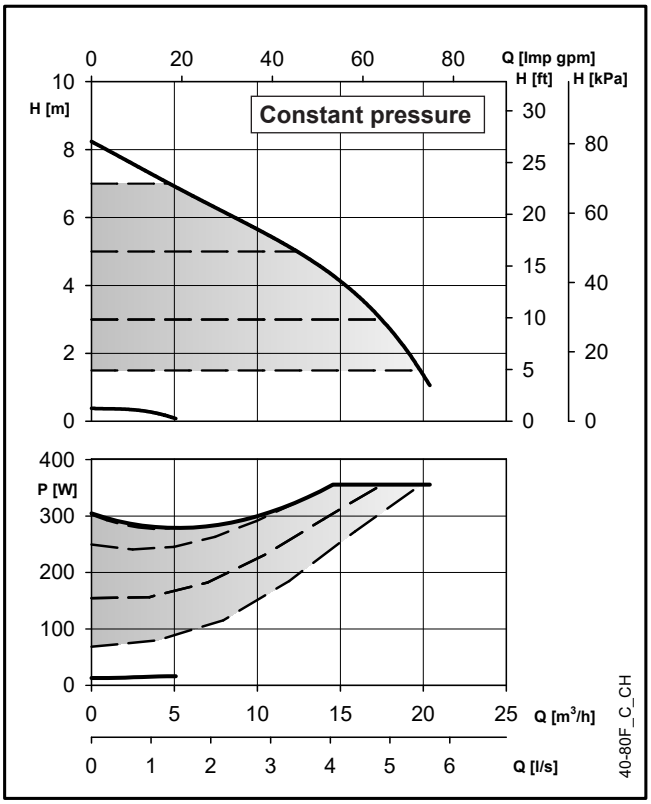

These performances are valid for liquids with density ρ = 1.0 Kg/dm³ and kinematic viscosity ν = 1 mm²/sec.

ecocirc XL-XLplus 40-80 F		Pump Data	
Rated voltage	1 x 230 V ±10%	IP protection	44
Frequency	50/60 Hz	Insulation class	155 (F)
Power absorbed [**W**] (min/max)	13 / 356	Max. working pressure	1,0 MPa (10 bar)
Input current [**A**] (min/max)	0,1 / 1,6	Liquid temperature	-10°C (14°F) to +110 °C (230°F)
Specific **EEI ≤**	0,23	Sound pressure level	≤ 48 dB(A)

En-Rev_D

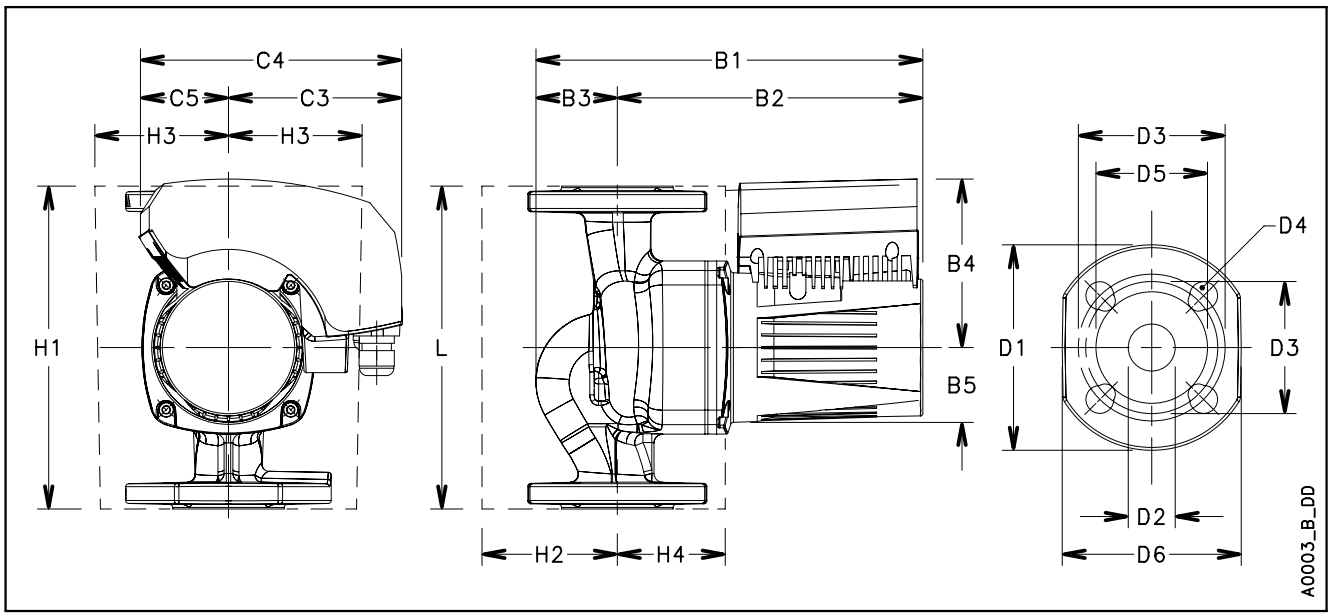

ecocirc XL-XLplus 40-80 F							Dimensions (mm)										**Net weight** 13,8 (Kg) - **Gross weight** 17,3 (Kg)	
L	**G**	**B1**	**B2**	**B3**	**B4**	**B5**	**C3**	**C4**	**C5**	**H1**	**H2**	**H3**	**H4**	**D1**	**D2**	**D3**	**D4**	**D5**
220	DN 40	322	256	66	130	51	128	209	81	220	94	96	86	150	40	100/110	4 x 14/19	84

En-Rev_B

ecocirc XL 40-100.12 F

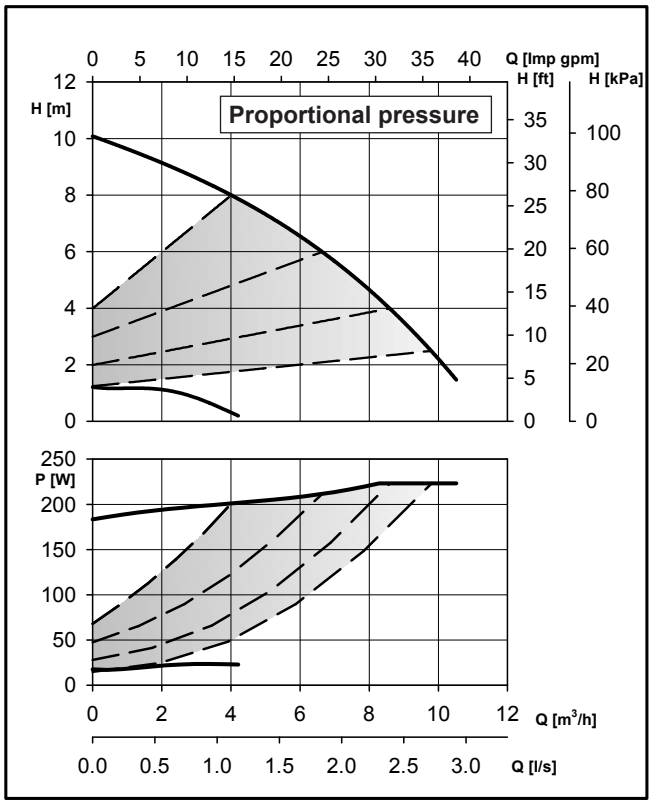

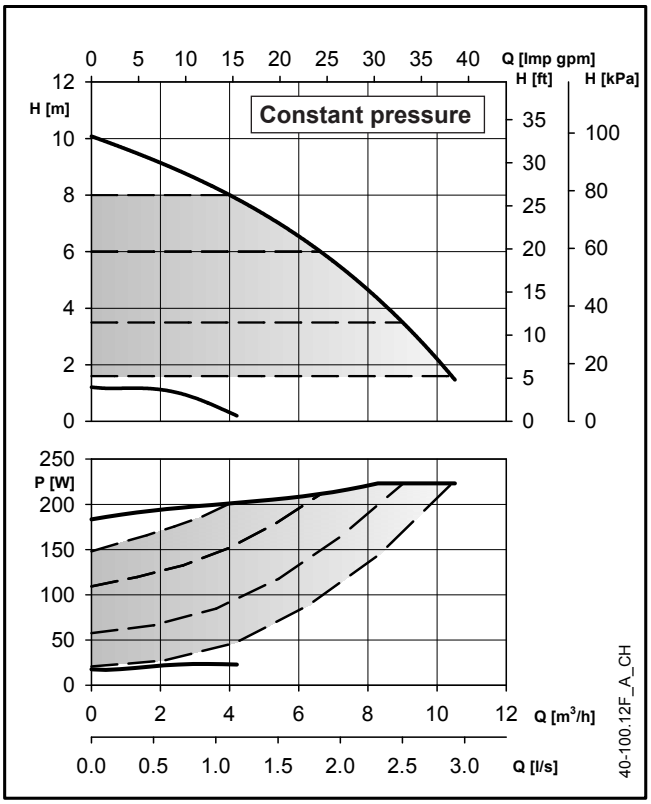

These performances are valid for liquids with density ρ = 1.0 Kg/dm³ and kinematic viscosity ν = 1 mm²/sec.

ecocirc XL 40-100.12 F		Pump Data	
Rated voltage	1 x 230 V ±10%	Insulation class	155 (F)
Frequency	50/60 Hz	Max. working pressure	1,0 MPa (10 bar)
Power absorbed [**W**] (min/max)	17 / 220	Liquid temperature	-10°C (14°F) to +110°C (230°F) for heating pumps
Input current [**A**] (min/max)	0,2 / 1,6		-10°C (14°F) to +85°C (185°F) for domestic hot water pumps
Specific **EEI ≤**	0,23	Sound pressure level	≤ 43 dB(A)
IP protection	44		

En-Rev_A

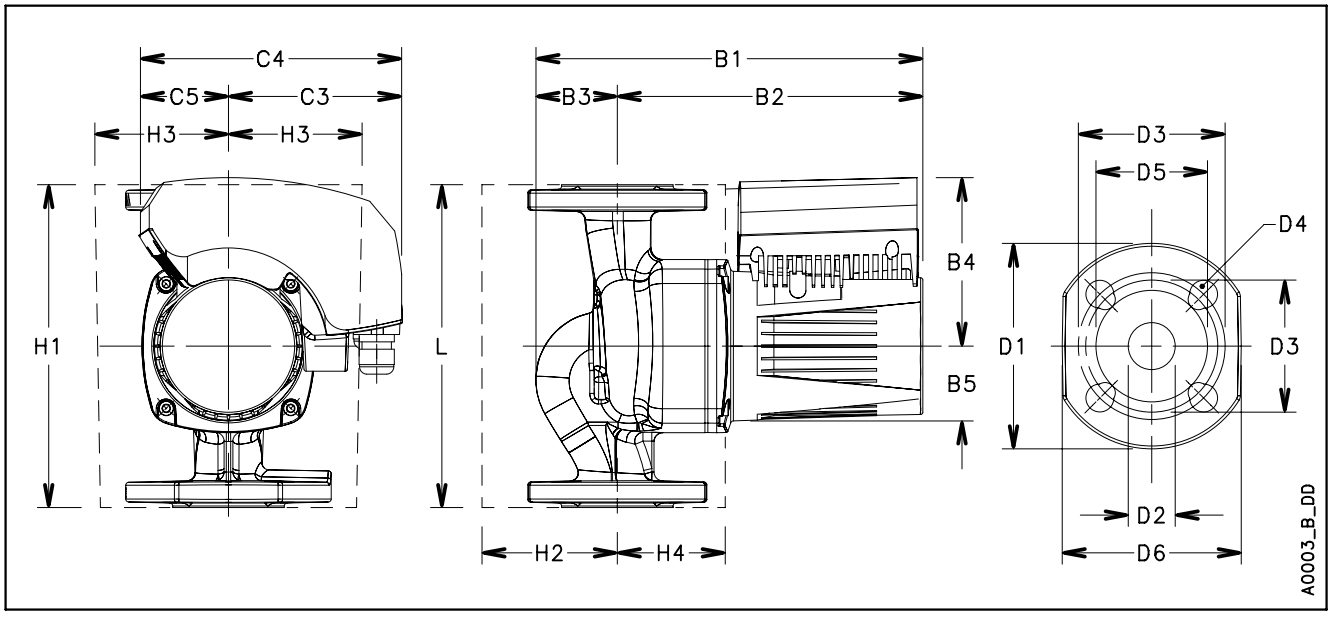

ecocirc XL 40-100.12 F							Dimensions (mm)									**Net weight** 10,7 (Kg) **- Gross weight** 14,2 (Kg)	
L	**G**	**B1**	**B2**	**B3**	**B4**	**B5**	**C3**	**C4**	**C5**	**H1**	**H2**	**H3**	**H4**	**D1**	**D2**	**D3**	**D4**	**D5**
220	DN 40	274	212	62	118	51	116	178	62	220	94	96	76	150	40	100/110	4 x 14/19	84

En-Rev_A

ecocirc XL-XLplus 40-100 F

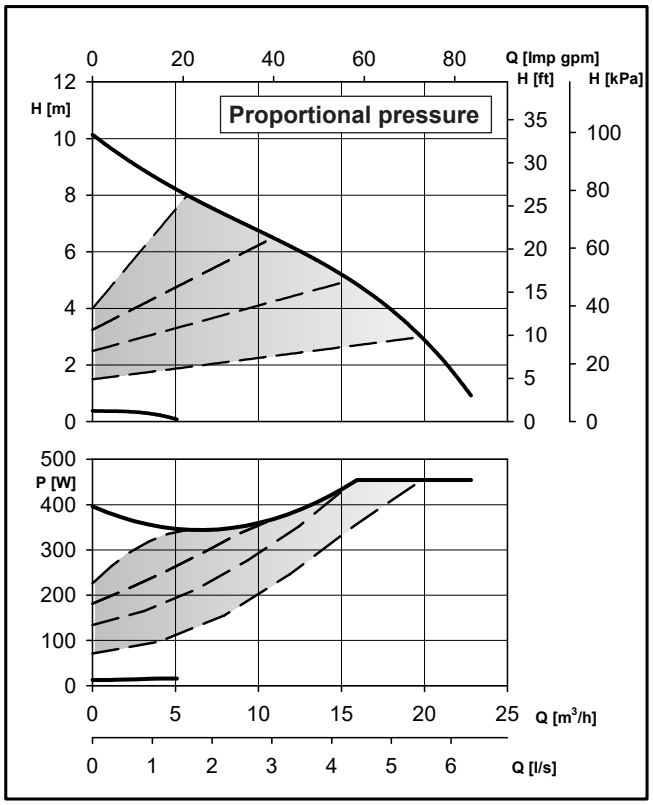

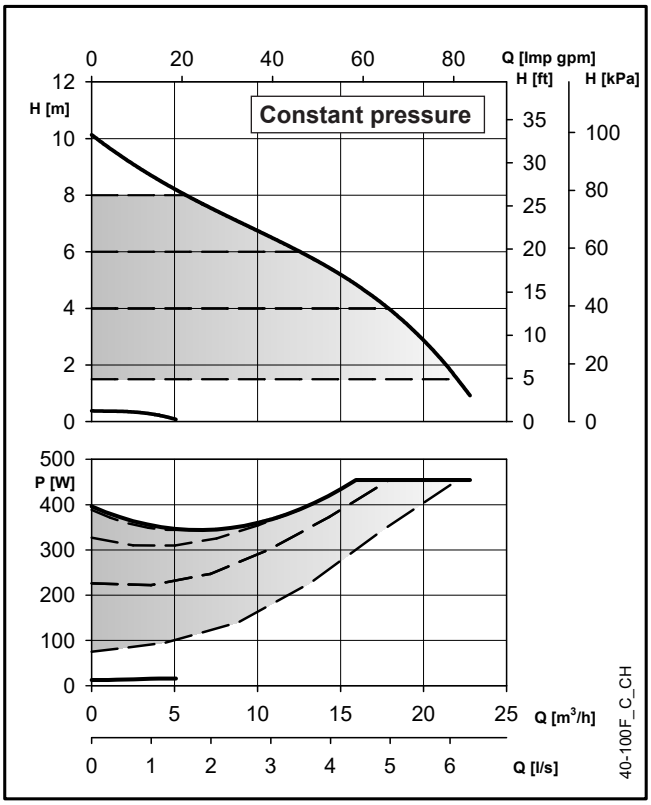

These performances are valid for liquids with density ρ = 1.0 Kg/dm³ and kinematic viscosity ν = 1 mm²/sec.

ecocirc XL-XLplus 40-100 F		Pump Data	
Rated voltage	1 x 230 V ±10%	IP protection	44
Frequency	50/60 Hz	Insulation class	155 (F)
Power absorbed [**W**] (min/max)	13 / 455	Max. working pressure	1,0 MPa (10 bar)
Input current [**A**] (min/max)	0,1 / 2,1	Liquid temperature	-10°C (14°F) to +110 °C (230°F)
Specific **EEI ≤**	0,23	Sound pressure level	≤ 48 dB(A)

En-Rev_D

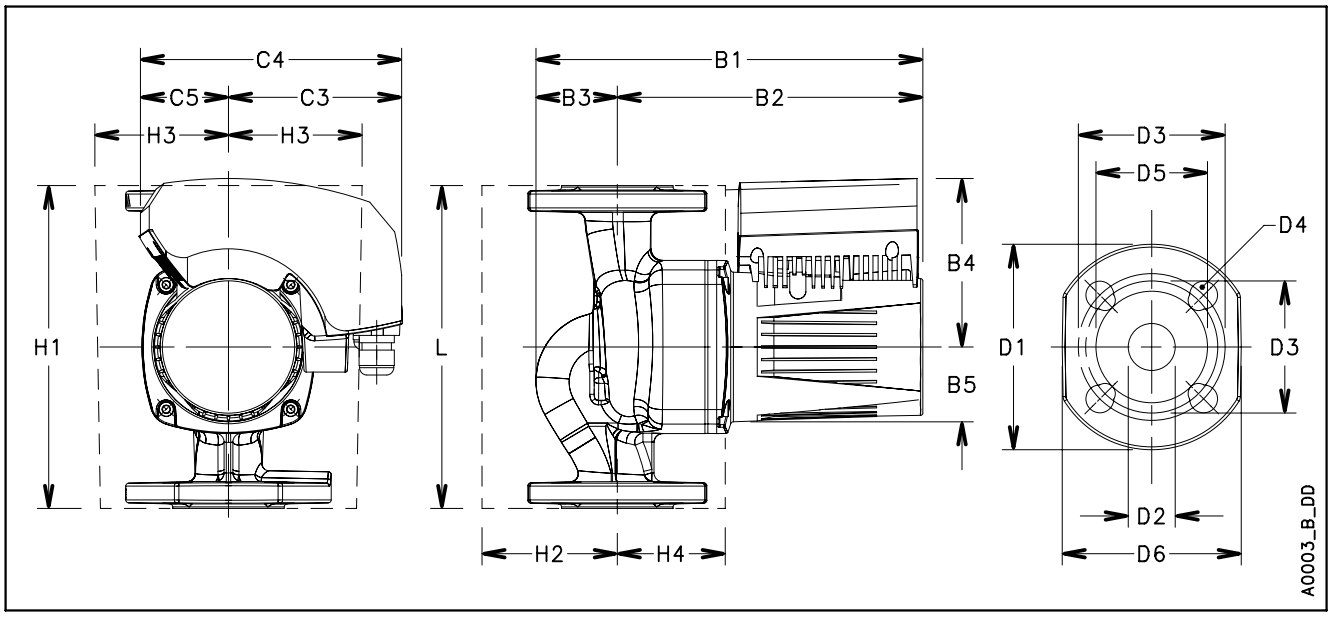

ecocirc XL-XLplus 40-100 F							Dimensions (mm)										Net weight 13,8 (Kg) - Gross weight 17,3 (Kg)	
L	**G**	**B1**	**B2**	**B3**	**B4**	**B5**	**C3**	**C4**	**C5**	**H1**	**H2**	**H3**	**H4**	**D1**	**D2**	**D3**	**D4**	**D5**
220	DN 40	322	256	66	130	51	128	209	81	220	94	96	86	150	40	100/110	4 x 14/19	84

En-Rev_B

ecocirc XL-XLplus 40-120 F (N)

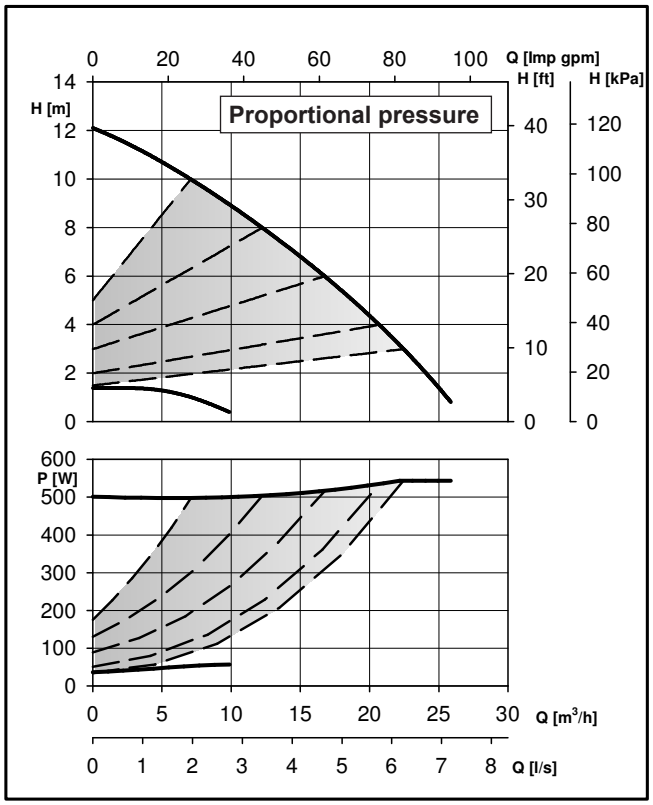

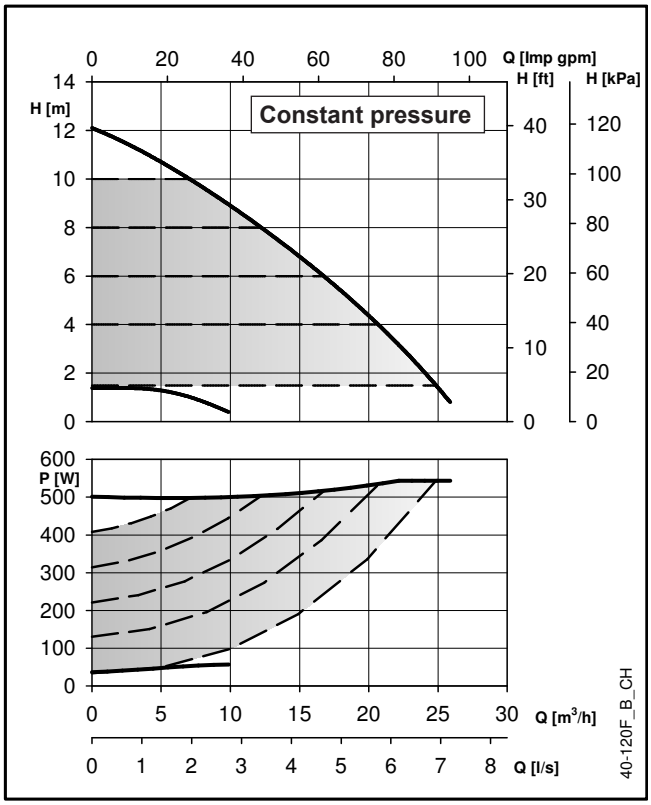

These performances are valid for liquids with density ρ = 1.0 Kg/dm³ and kinematic viscosity ν = 1 mm²/sec.

ecocirc XL-XLplus 40-120 F (N)		Pump Data	
Rated voltage	1 x 230 V ±10%	IP protection	44
Frequency	50/60 Hz	Insulation class	155 (F)
Power absorbed [**W**] (min/max)	36 / 544	Max. working pressure	1,0 MPa (10 bar)
Input current [**A**] (min/max)	0,2 / 2,4	Liquid temperature	-10°C (14°F) to +110 °C (230°F)
Specific **EEI ≤**	0,23	Sound pressure level	≤ 48 dB(A)

En-Rev_E

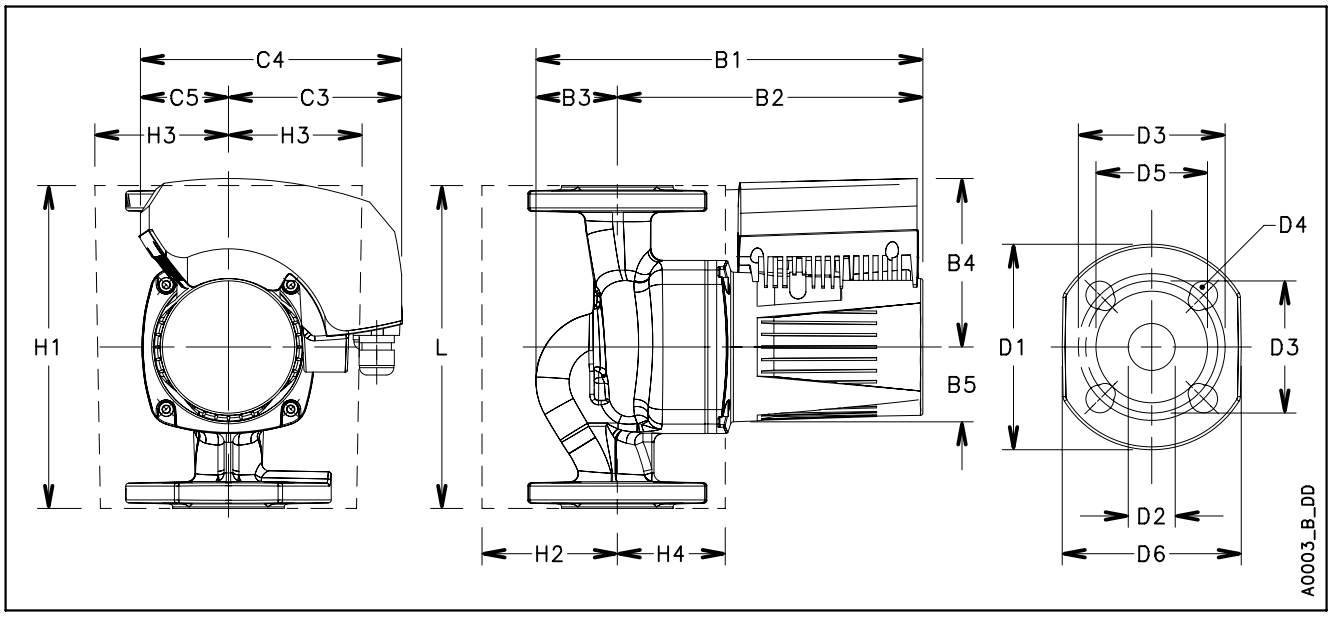

ecocirc XL-XLplus 40-120 F (N)					Dimensions (mm)									Net weight 13,9 (Kg) - Gross weight 17,7 (Kg)				
L	**G**	**B1**	**B2**	**B3**	**B4**	**B5**	**C3**	**C4**	**C5**	**H1**	**H2**	**H3**	**H4**	**D1**	**D2**	**D3**	**D4**	**D5**
250	DN 40	338	256	82	132	53	128	206	78	250	87	90	88	150	40	100/110	4 x 14/19	84

En-Rev_C

ecocirc XL-XLplus 40-150 F

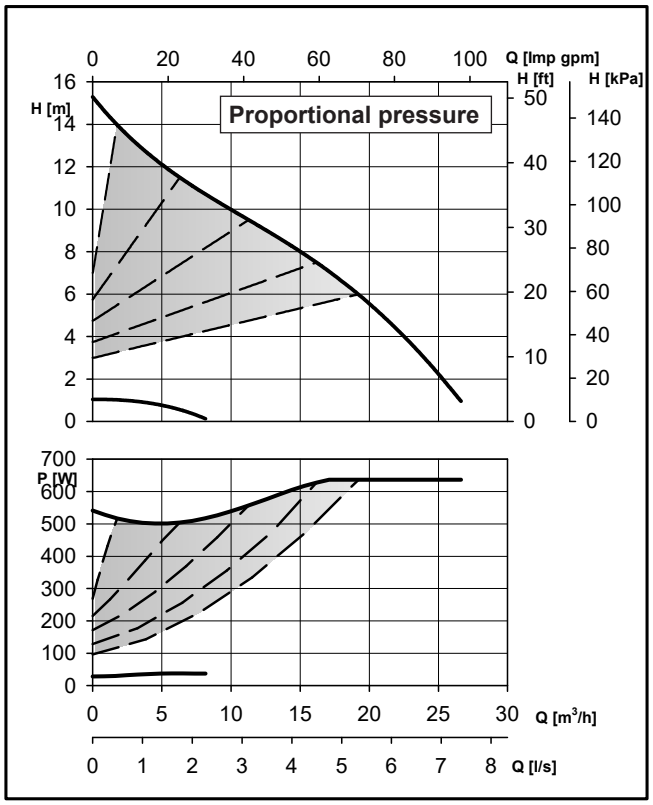

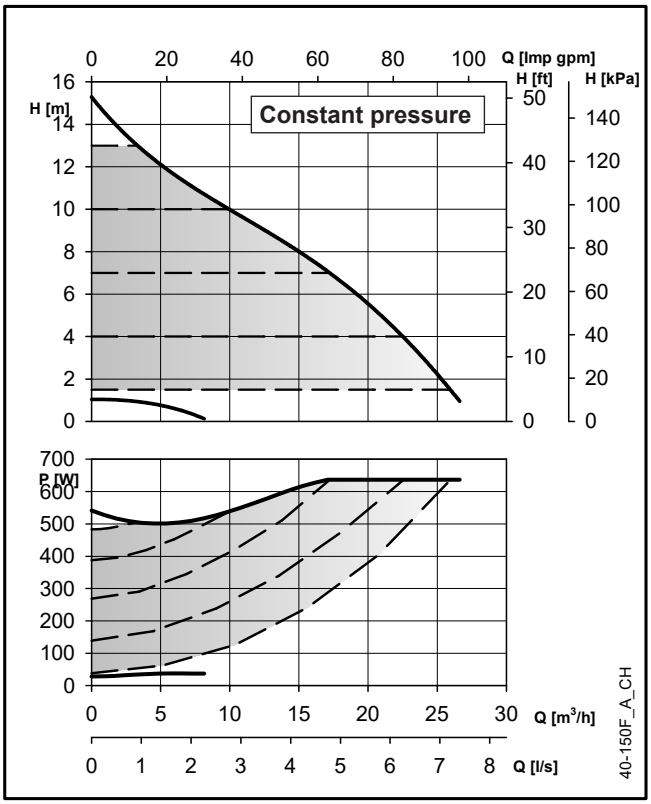

These performances are valid for liquids with density ρ = 1.0 Kg/dm³ and kinematic viscosity ν = 1 mm²/sec.

ecocirc XL-XLplus 40-150 F		Pump Data	
Rated voltage	1 x 230 V ±10%	IP protection	44
Frequency	50/60 Hz	Insulation class	155 (F)
Power absorbed [**W**] (min/max)	28 / 637	Max. working pressure	1,0 MPa (10 bar)
Input current [**A**] (min/max)	0,4 / 2,9	Liquid temperature	-10°C (14°F) to +110 °C (230°F)
Specific **EEI ≤**	0,23	Sound pressure level	≤ 52 dB(A)

En-Rev_A

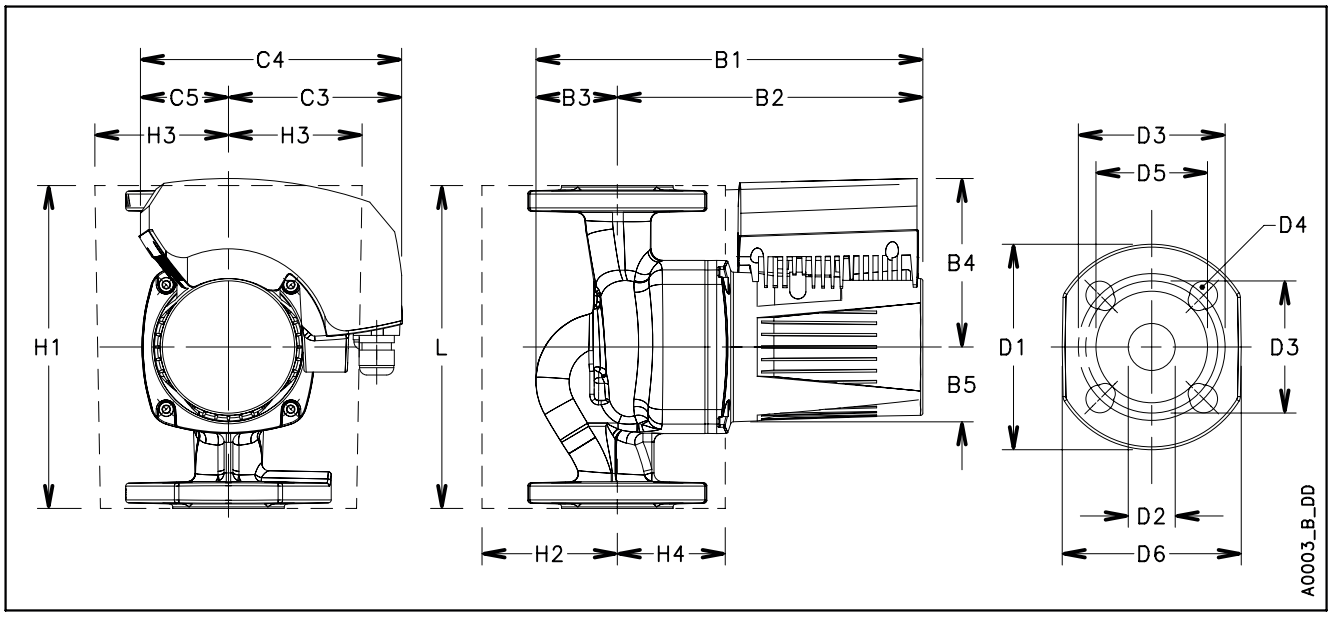

ecocirc XL-XLplus 40-150 F							Dimensions (mm)										**Net weight** 17,8 (Kg) **- Gross weight** 21,6 (Kg)
L	**G**	**B1**	**B2**	**B3**	**B4**	**B5**	**C3**	**C4**	**C5**	**H1**	**H2**	**H3**	**H4**	**D1**	**D2**	**D3**	**D4**	**D5**
250	DN 40	365	299	66	147	61	146	239	93	240	86	90/102	93	150	40	100/110	4 x 14/19	84

En-Rev_A

ecocirc XL-XLplus 40-180 F

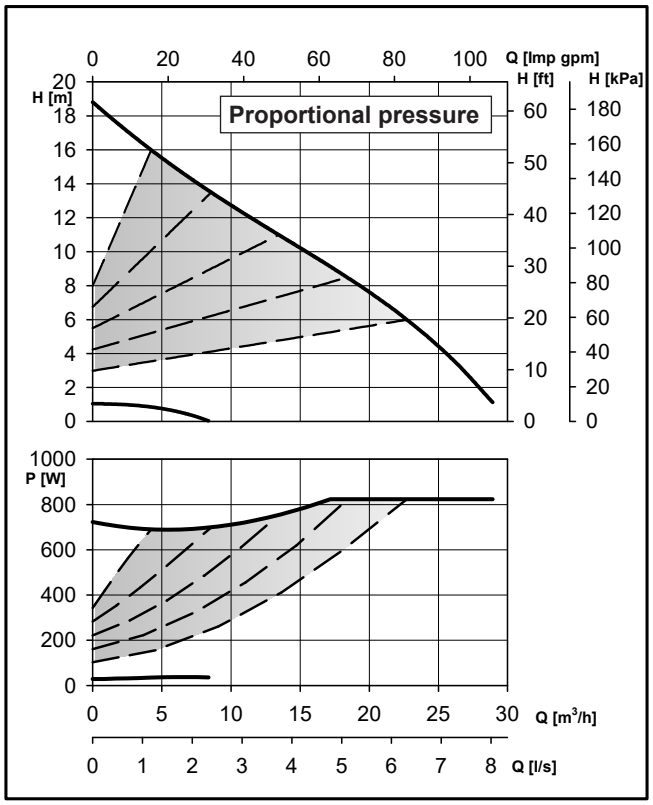

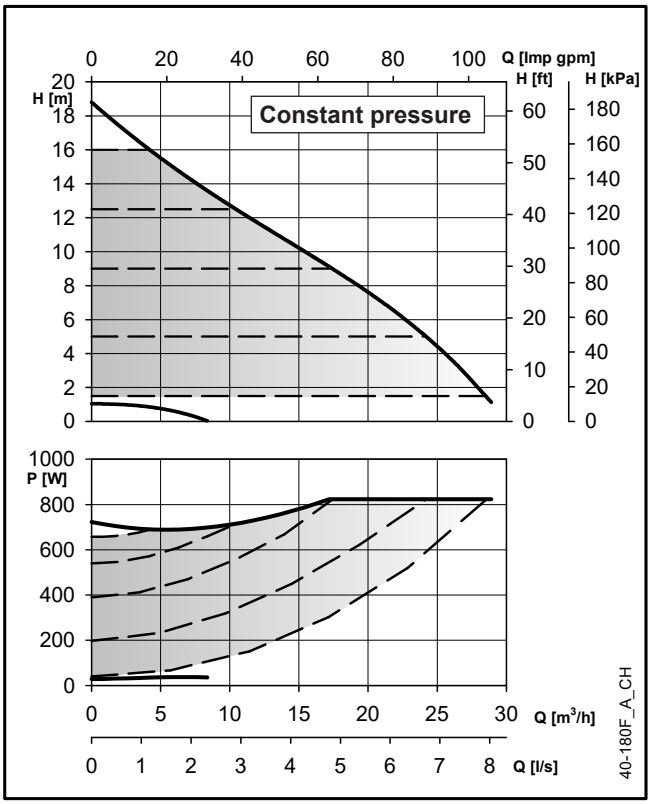

These performances are valid for liquids with density ρ = 1.0 Kg/dm³ and kinematic viscosity ν = 1 mm²/sec.

ecocirc XL-XLplus 40-180 F		Pump Data	
Rated voltage	1 x 230 V ±10%	IP protection	44
Frequency	50/60 Hz	Insulation class	155 (F)
Power absorbed [**W**] (min/max)	29 / 823	Max. working pressure	1,0 MPa (10 bar)
Input current [**A**] (min/max)	0,4 / 3,7	Liquid temperature	-10°C (14°F) to +110 °C (230°F)
Specific **EEI ≤**	0,23	Sound pressure level	≤ 52 dB(A)

En-Rev_A

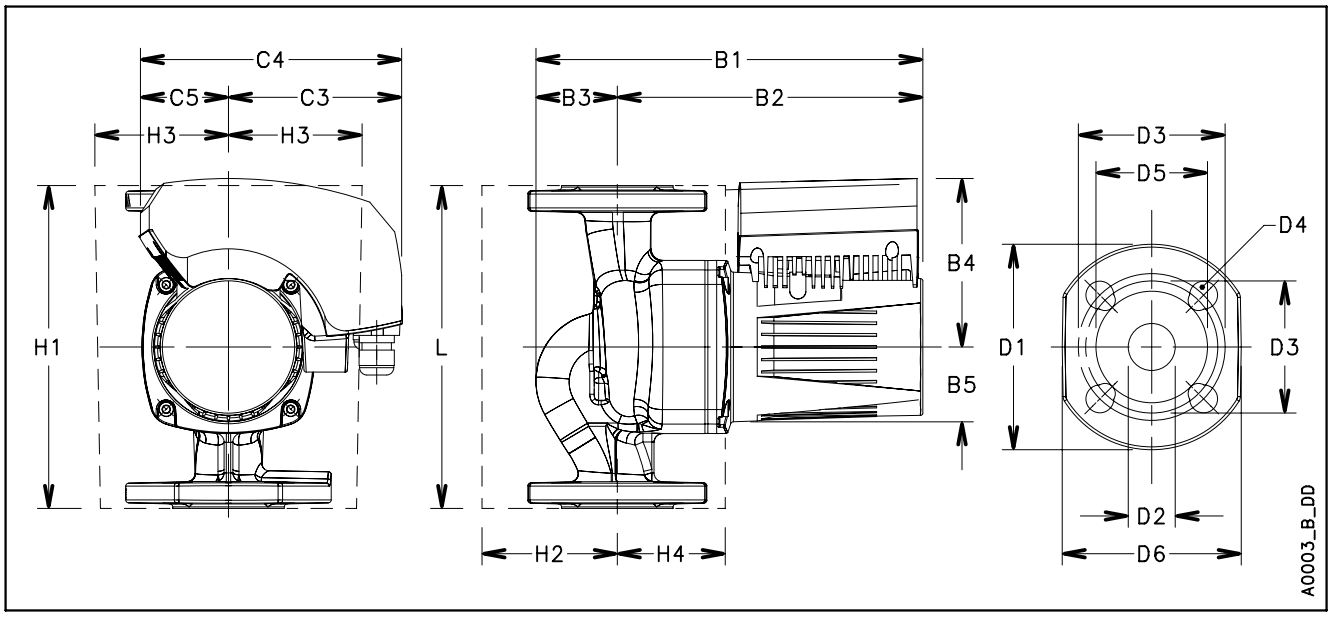

ecocirc XL-XLplus 40-180 F							Dimensions (mm)										Net weight 17,8 (Kg) - Gross weight 21,6 (Kg)	
L	**G**	**B1**	**B2**	**B3**	**B4**	**B5**	**C3**	**C4**	**C5**	**H1**	**H2**	**H3**	**H4**	**D1**	**D2**	**D3**	**D4**	**D5**
250	DN 40	365	299	66	147	61	146	239	93	240	86	90/102	93	150	40	100/110	4 x 14/19	84

En-Rev_A

ecocirc XL-XLplus 50-80 F (N)

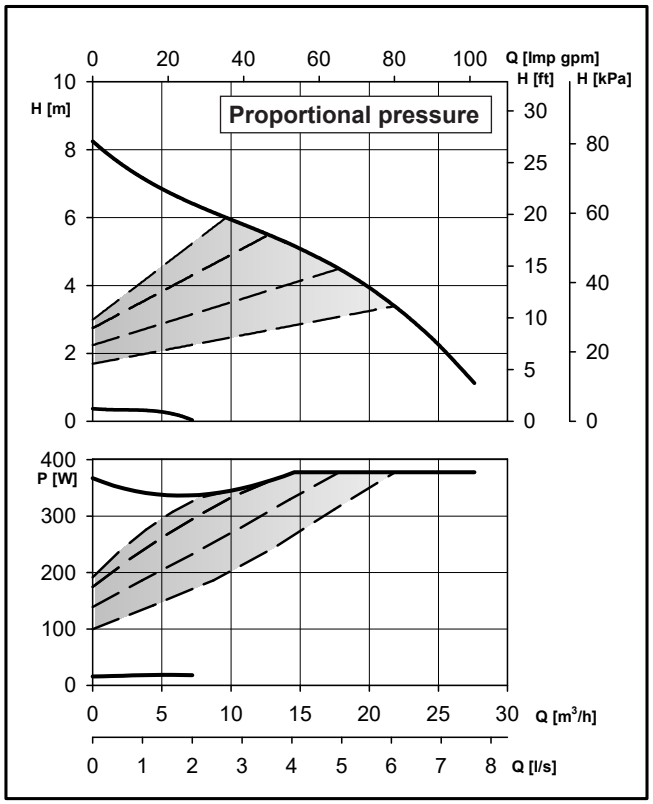

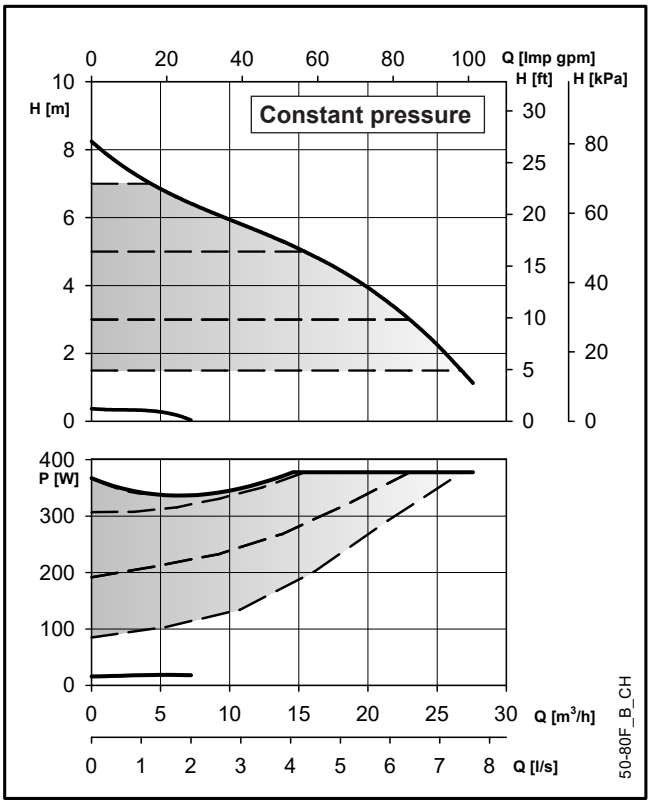

These performances are valid for liquids with density ρ = 1.0 Kg/dm³ and kinematic viscosity ν = 1 mm²/sec.

ecocirc XL-XLplus 50-80 F (N)		Pump Data	
Rated voltage	1 x 230 V ±10%	IP protection	44
Frequency	50/60 Hz	Insulation class	155 (F)
Power absorbed [**W**] (min/max)	16 / 377	Max. working pressure	1,0 MPa (10 bar)
Input current [**A**] (min/max)	0,1 / 1,7	Liquid temperature	-10°C (14°F) to +110 °C (230°F)
Specific **EEI ≤**	0,23	Sound pressure level	≤ 48 dB(A)

En-Rev_E

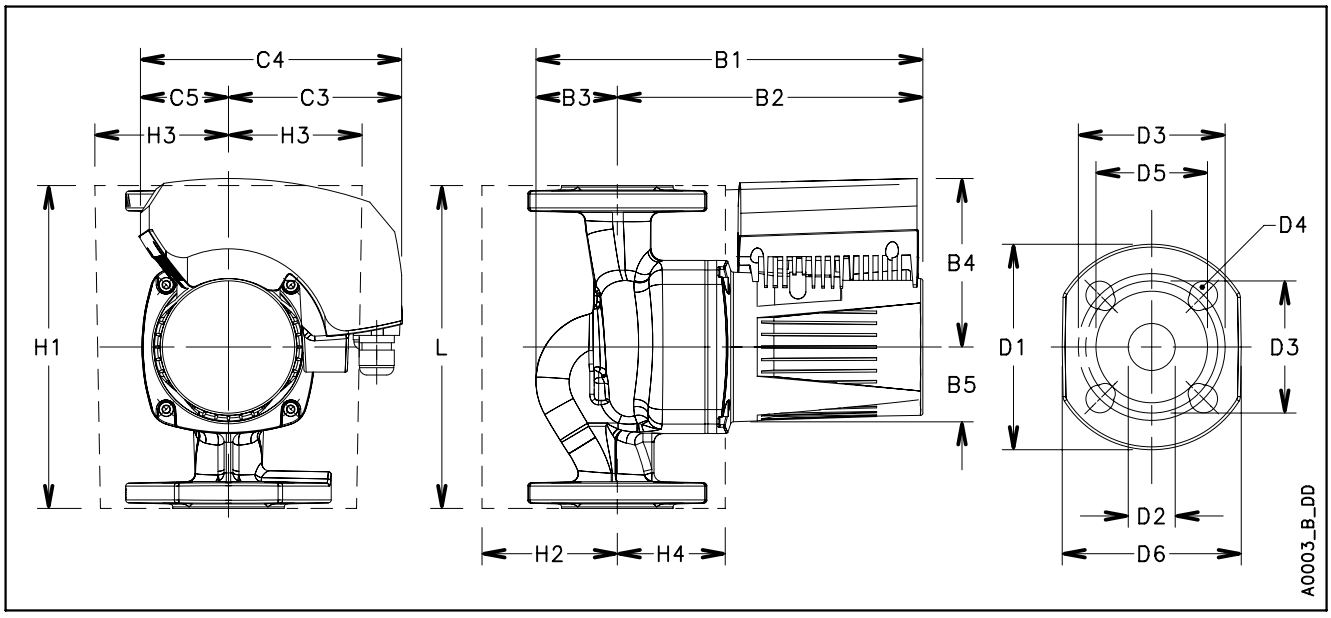

ecocirc XL-XLplus 50-80 F (N)							Dimensions (mm)							**Net weight** 15,9 (Kg) **- Gross weight** 19,7 (Kg)				
L	**G**	**B1**	**B2**	**B3**	**B4**	**B5**	**C3**	**C4**	**C5**	**H1**	**H2**	**H3**	**H4**	**D1**	**D2**	**D3**	**D4**	**D5**
240	DN 50	355	261	94	132	53	128	206	78	280	93	93	93	165	50	110/125	4 x 14/19	100

En-Rev_E

ecocirc XL-XLplus 50-100 F

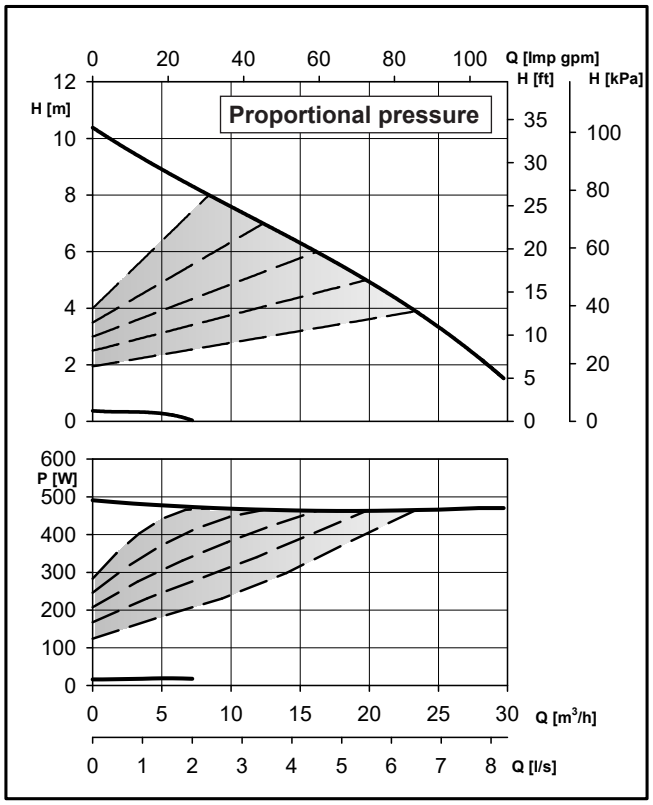

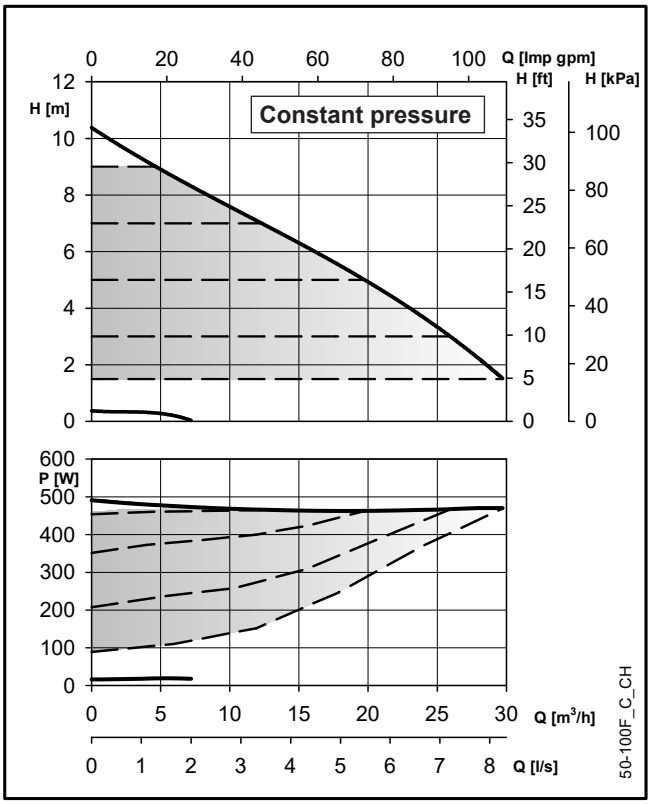

These performances are valid for liquids with density ρ = 1.0 Kg/dm³ and kinematic viscosity ν = 1 mm²/sec.

ecocirc XL-XLplus 50-100 F		Pump Data	
Rated voltage	1 x 230 V ±10%	IP protection	44
Frequency	50/60 Hz	Insulation class	155 (F)
Power absorbed [**W**] (min/max)	16 / 493	Max. working pressure	1,0 MPa (10 bar)
Input current [**A**] (min/max)	0,1 / 2,2	Liquid temperature	-10°C (14°F) to +110 °C (230°F)
Specific **EEI ≤**	0,23	Sound pressure level	≤ 48 dB(A)

En-Rev_D

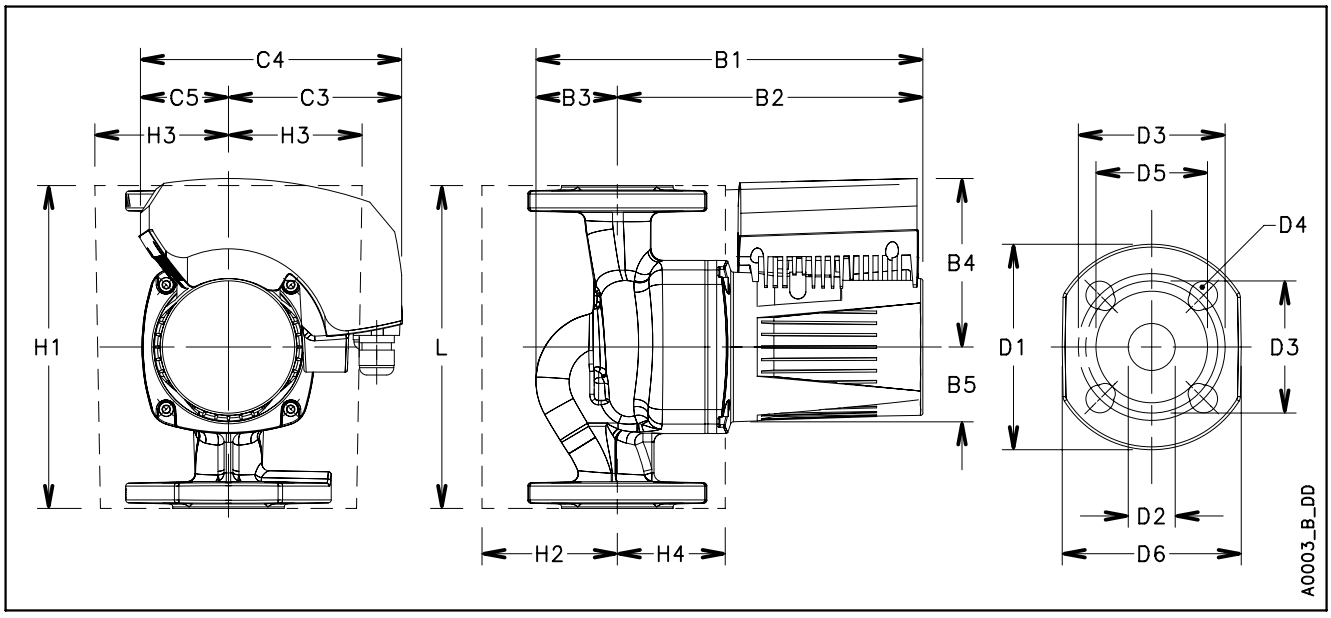

ecocirc XL-XLplus 50-100 F							Dimensions (mm)										Net weight 16,8 (Kg) - Gross weight 30,3 (Kg)	
L	**G**	**B1**	**B2**	**B3**	**B4**	**B5**	**C3**	**C4**	**C5**	**H1**	**H2**	**H3**	**H4**	**D1**	**D2**	**D3**	**D4**	**D5**
280	DN 50	337	265	72	130	51	128	209	81	280	96	104	95	165	50	110/125	4 x 14/19	99

En-Rev_B

ecocirc XL-XLplus 50-120 F (N)

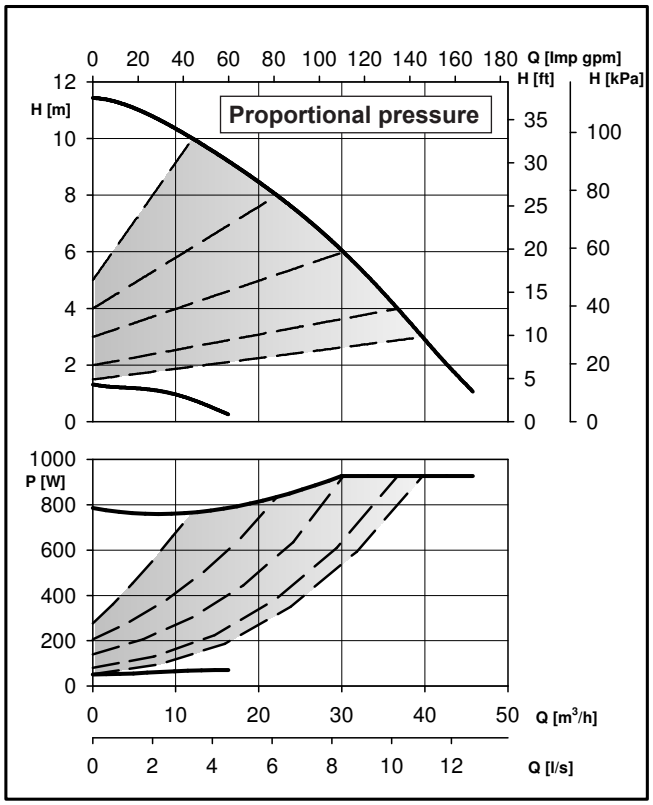

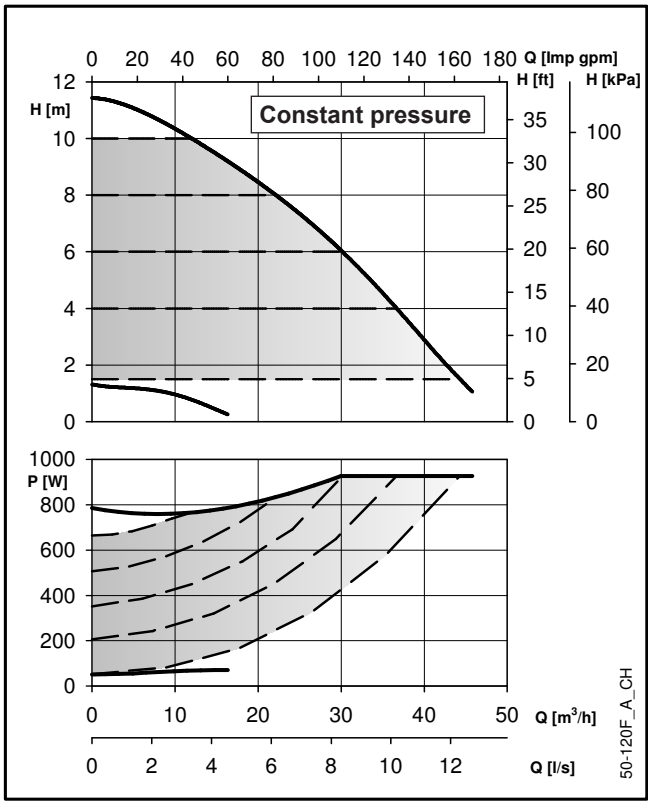

These performances are valid for liquids with density ρ = 1.0 Kg/dm³ and kinematic viscosity ν = 1 mm²/sec.

ecocirc XL-XLplus 50-120 F (N)		Pump Data	
Rated voltage	1 x 230 V ±10%	IP protection	44
Frequency	50/60 Hz	Insulation class	155 (F)
Power absorbed [**W**] (min/max)	53 / 892	Max. working pressure	1,0 MPa (10 bar)
Input current [**A**] (min/max)	0,4 / 4,0	Liquid temperature	-10°C (14°F) to +110 °C (230°F)
Specific **EEI ≤**	0,23	Sound pressure level	≤ 52 dB(A)

En-Rev_D

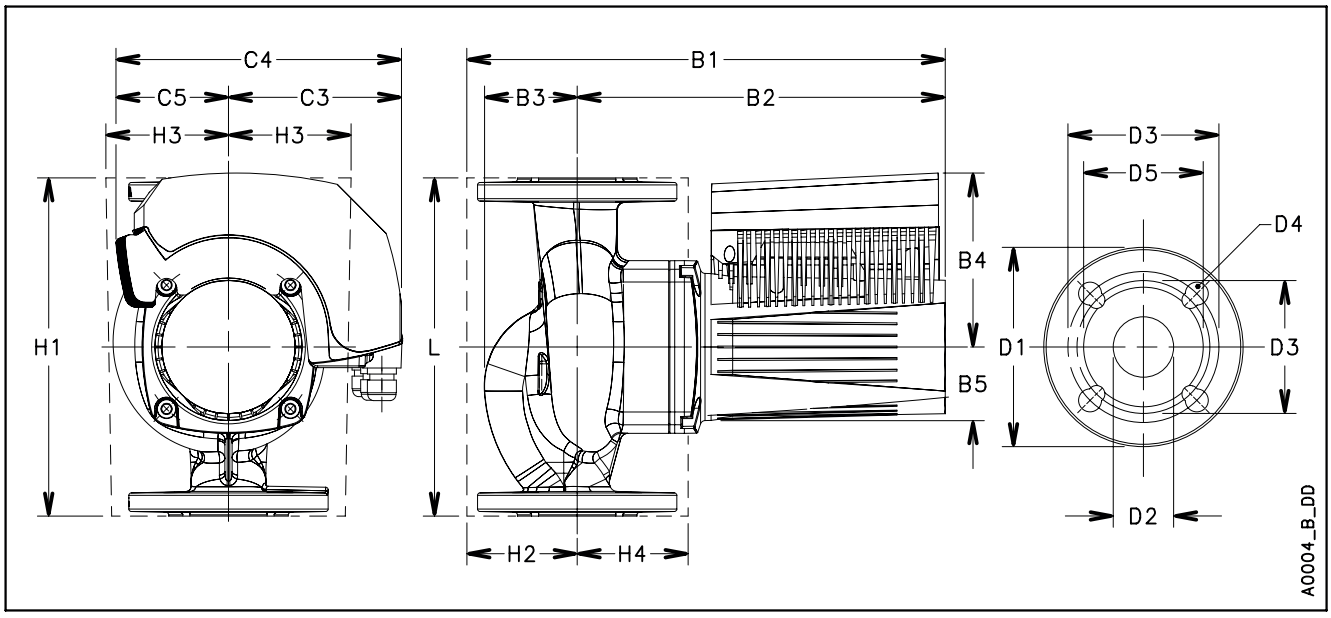

ecocirc XL-XLplus 50-120 F (N)										Dimensions (mm)								**Net weight** 15,1 (Kg) - **Gross weight** 19 (Kg)
L	**G**	**B1**	**B2**	**B3**	**B4**	**B5**	**C3**	**C4**	**C5**	**H1**	**H2**	**H3**	**H4**	**D1**	**D2**	**D3**	**D4**	**D5**
280	DN 50	368	290	78	147	60	148	230	82	280	94	105	95	165	50	110/125	4 x 14/19	100

En-Rev_C

ecocirc XL-XLplus 50-150 F

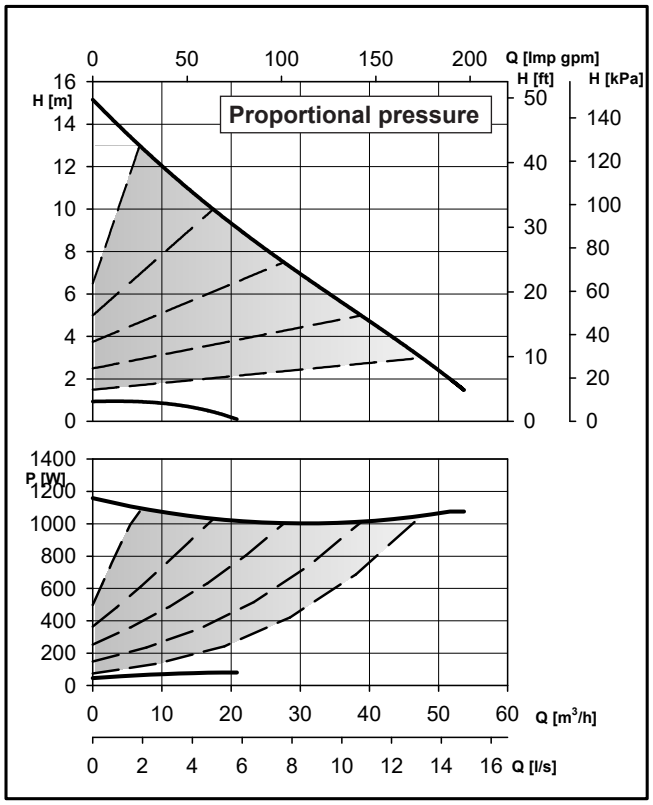

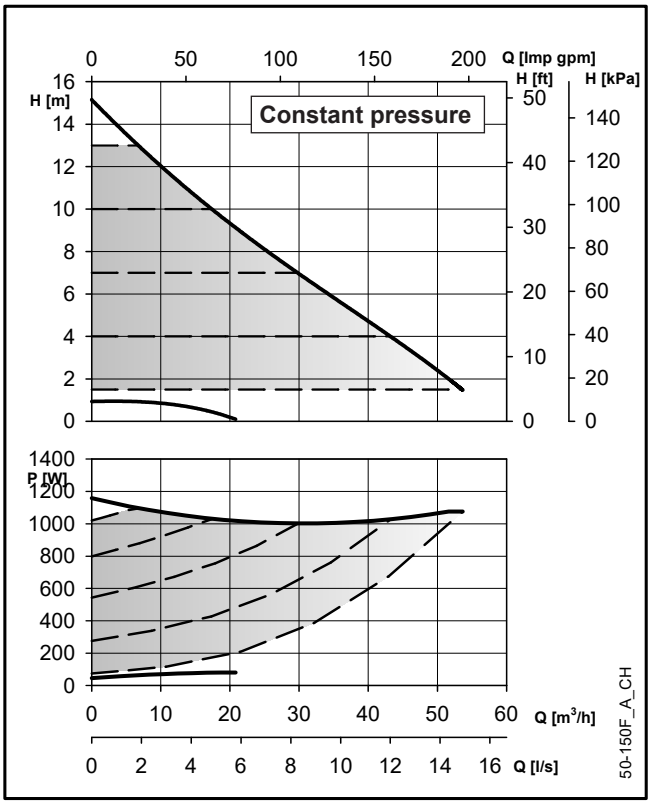

These performances are valid for liquids with density ρ = 1.0 Kg/dm³ and kinematic viscosity ν = 1 mm²/sec.

ecocirc XL-XLplus 50-150 F		Pump Data	
Rated voltage	1 x 230 V ±10%	IP protection	44
Frequency	50/60 Hz	Insulation class	155 (F)
Power absorbed [**W**] (min/max)	46 / 1150	Max. working pressure	1,0 MPa (10 bar)
Input current [**A**] (min/max)	0,4 / 5,1	Liquid temperature	-10°C (14°F) to +110 °C (230°F)
Specific **EEI ≤**	0,23	Sound pressure level	≤ 52 dB(A)

En-Rev_A

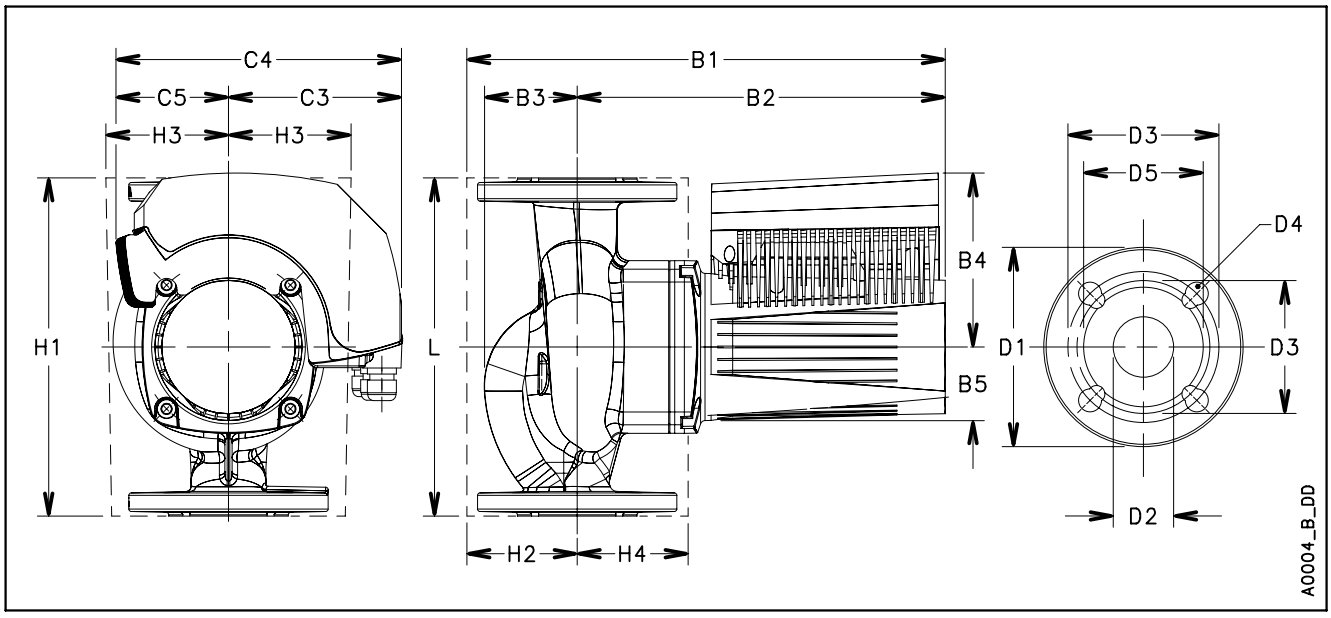

ecocirc XL-XLplus 50-150 F				Dimensions (mm)									**Net weight** 22,6 (Kg) **- Gross weight** 26,4 (Kg)					
L	**G**	**B1**	**B2**	**B3**	**B4**	**B5**	**C3**	**C4**	**C5**	**H1**	**H2**	**H3**	**H4**	**D1**	**D2**	**D3**	**D4**	**D5**
280	DN 50	386	314	72	147	61	146	242	96	273	87	107/125	103	165	50	110/125	4 x 14/19	99

En-Rev_A

ecocirc XL-XLplus 50-180 F

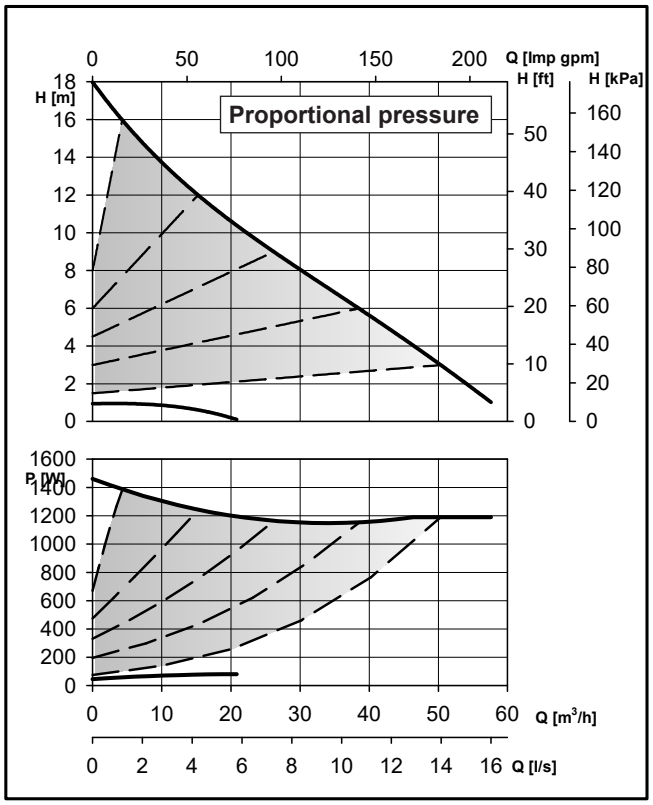

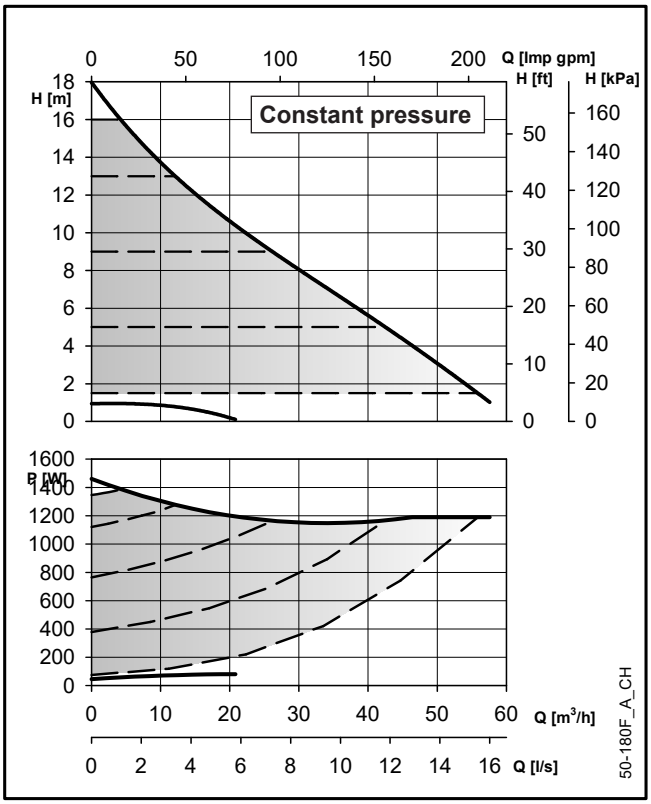

These performances are valid for liquids with density ρ = 1.0 Kg/dm³ and kinematic viscosity ν = 1 mm²/sec.

ecocirc XL-XLplus 50-180 F		Pump Data	
Rated voltage	1 x 230 V ±10%	IP protection	44
Frequency	50/60 Hz	Insulation class	155 (F)
Power absorbed [**W**] (min/max)	46 / 1470	Max. working pressure	1,0 MPa (10 bar)
Input current [**A**] (min/max)	0,4 / 6,9	Liquid temperature	-10°C (14°F) to +110 °C (230°F)
Specific **EEI ≤**	0,23	Sound pressure level	≤ 52 dB(A)

En-Rev_A

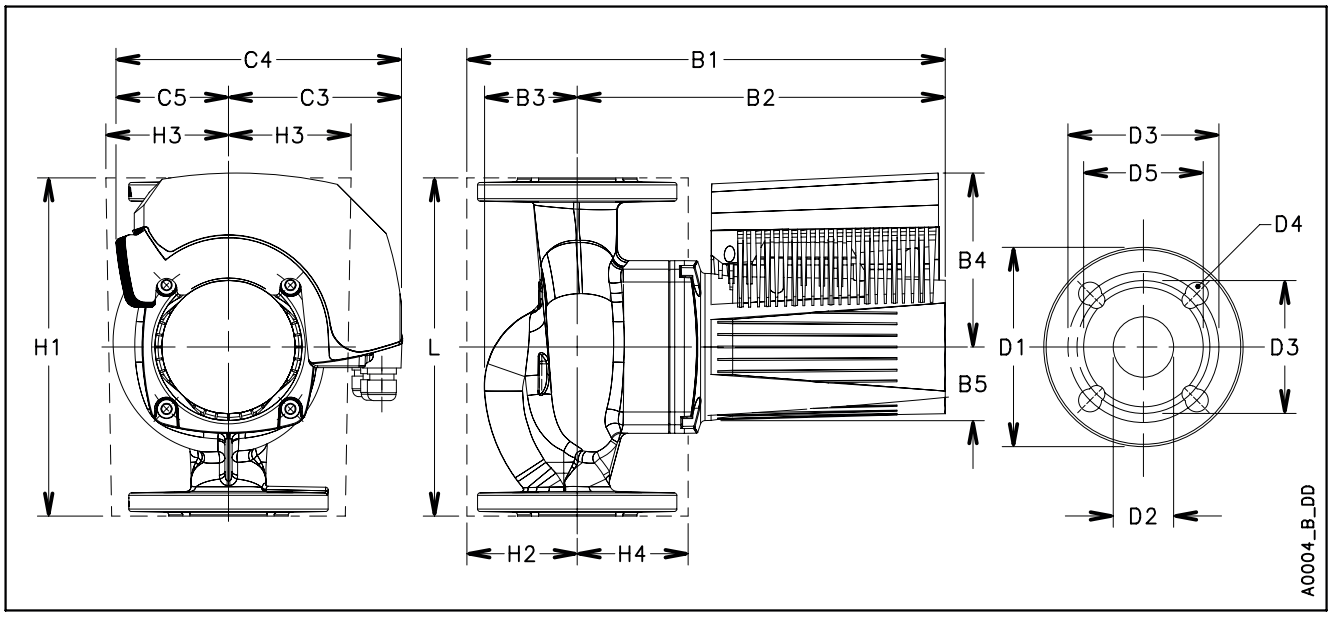

ecocirc XL-XLplus 50-180 F							Dimensions (mm)										**Net weight** 22,6 (Kg) **- Gross weight** 26,4 (Kg)
L	**G**	**B1**	**B2**	**B3**	**B4**	**B5**	**C3**	**C4**	**C5**	**H1**	**H2**	**H3**	**H4**	**D1**	**D2**	**D3**	**D4**	**D5**
280	DN 50	386	314	72	147	61	146	242	96	273	87	107/125	103	165	50	110/125	4 x 14/19	99

En-Rev_A

ecocirc XL-XLplus 65-80 F (N)

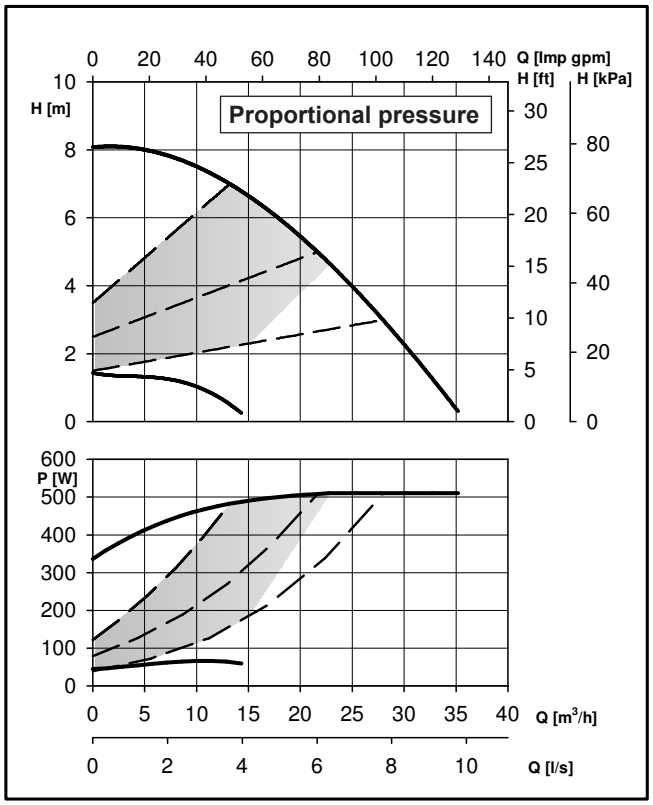

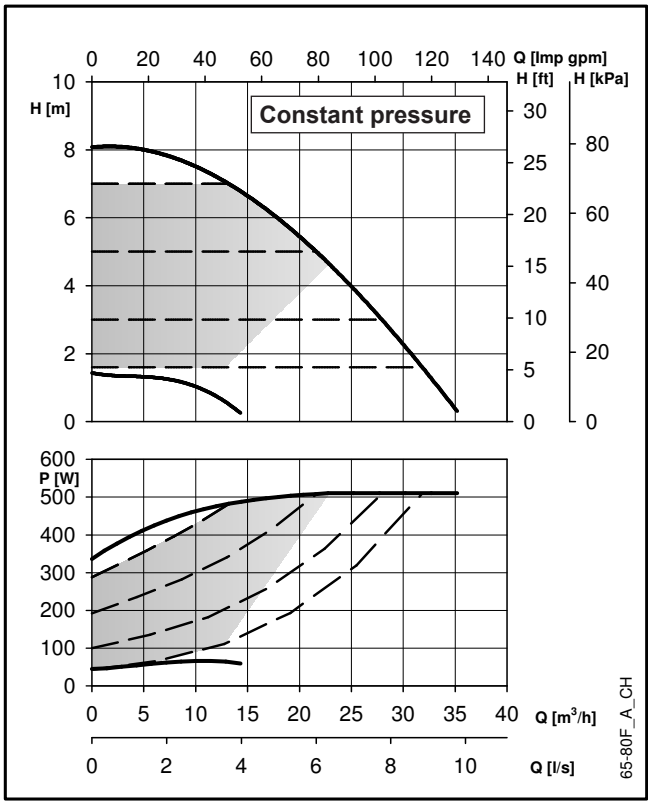

These performances are valid for liquids with density ρ = 1.0 Kg/dm³ and kinematic viscosity ν = 1 mm²/sec.

ecocirc XL-XLplus 65-80 F (N)		Pump Data	
Rated voltage	1 x 230 V ±10%	IP protection	44
Frequency	50/60 Hz	Insulation class	155 (F)
Power absorbed [**W**] (min/max)	45 / 510	Max. working pressure	1,0 MPa (10 bar)
Input current [**A**] (min/max)	0,2 / 2,2	Liquid temperature	-10°C (14°F) to +110 °C (230°F)
Specific **EEI ≤**	0,23	Sound pressure level	≤ 48 dB(A)

En-Rev_D

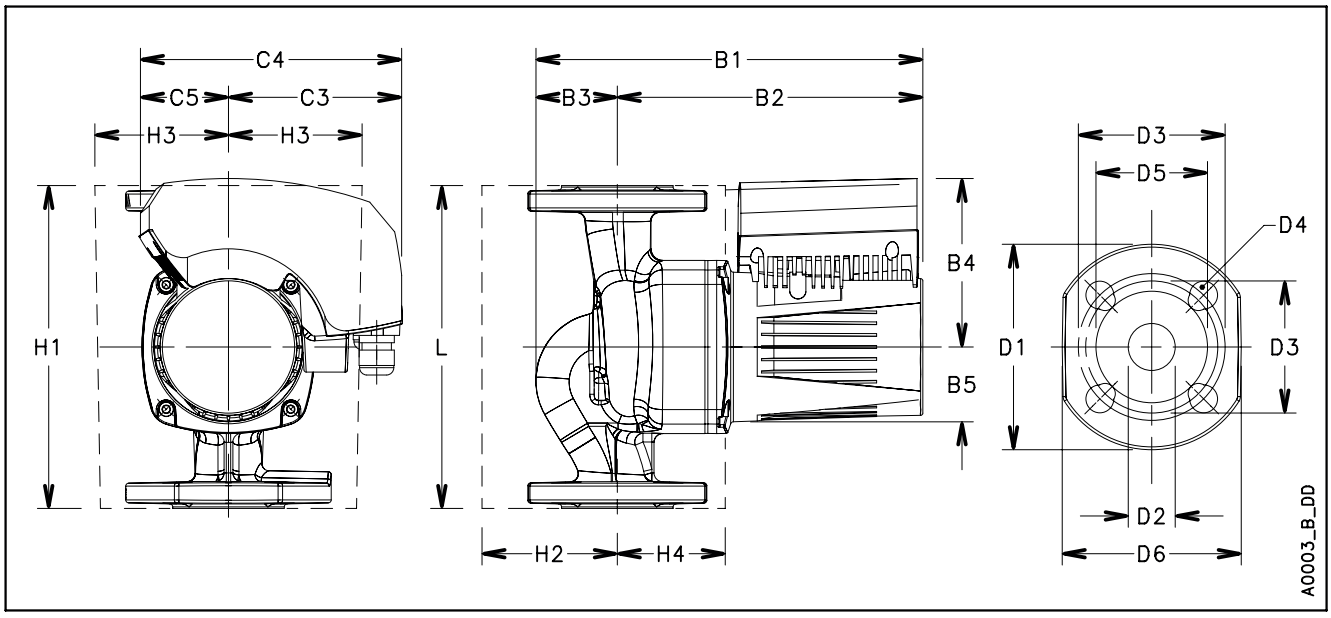

ecocirc XL-XLplus 65-80 F (N)							Dimensions (mm)										Net weight 18,9 (Kg) - Gross weight 24,2 (Kg)	
L	**G**	**B1**	**B2**	**B3**	**B4**	**B5**	**C3**	**C4**	**C5**	**H1**	**H2**	**H3**	**H4**	**D1**	**D2**	**D3**	**D4**	**D5**
340	DN 65	364	267	97	132	53	128	206	78	340	112	106	108	185	65	130/145	4 x 14/19	118

En-Rev_C

ecocirc XL-XLplus 65-120 F (N)

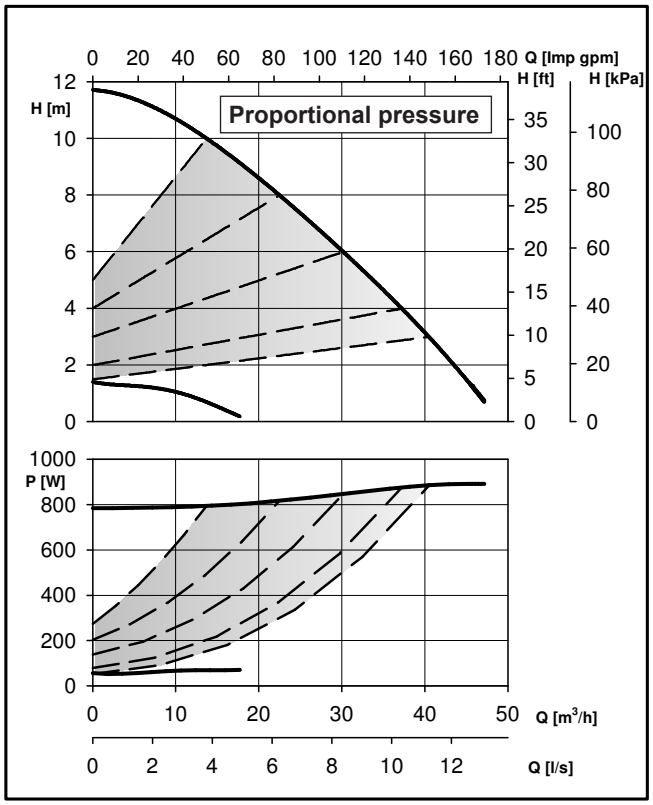

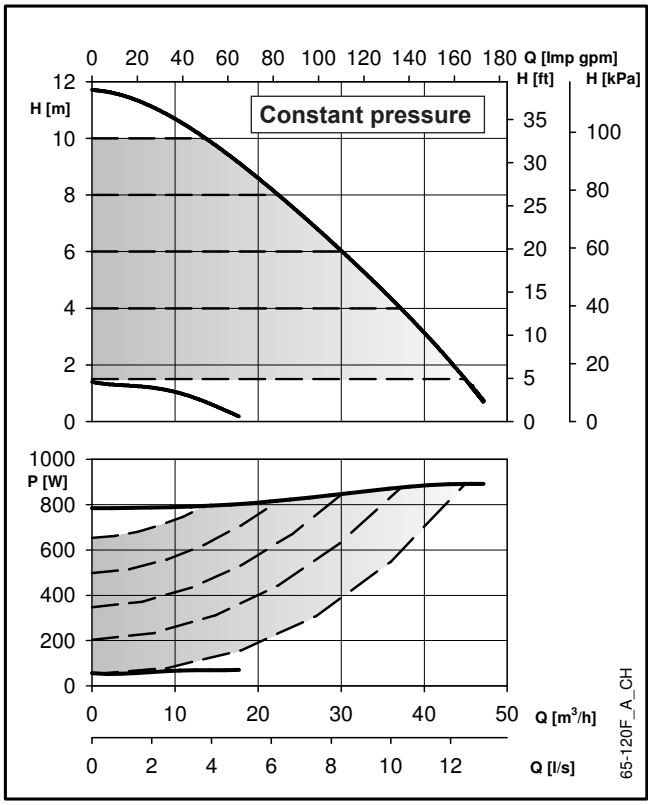

These performances are valid for liquids with density ρ = 1.0 Kg/dm³ and kinematic viscosity ν = 1 mm²/sec.

ecocirc XL-XLplus 65-120 F (N)		Pump Data	
Rated voltage	1 x 230 V ±10%	IP protection	44
Frequency	50/60 Hz	Insulation class	155 (F)
Power absorbed [**W**] (min/max)	52 / 927	Max. working pressure	1,0 MPa (10 bar)
Input current [**A**] (min/max)	0,4 / 4,1	Liquid temperature	-10°C (14°F) to +110 °C (230°F)
Specific **EEI ≤**	0,23	Sound pressure level	≤ 52 dB(A)

En-Rev_E

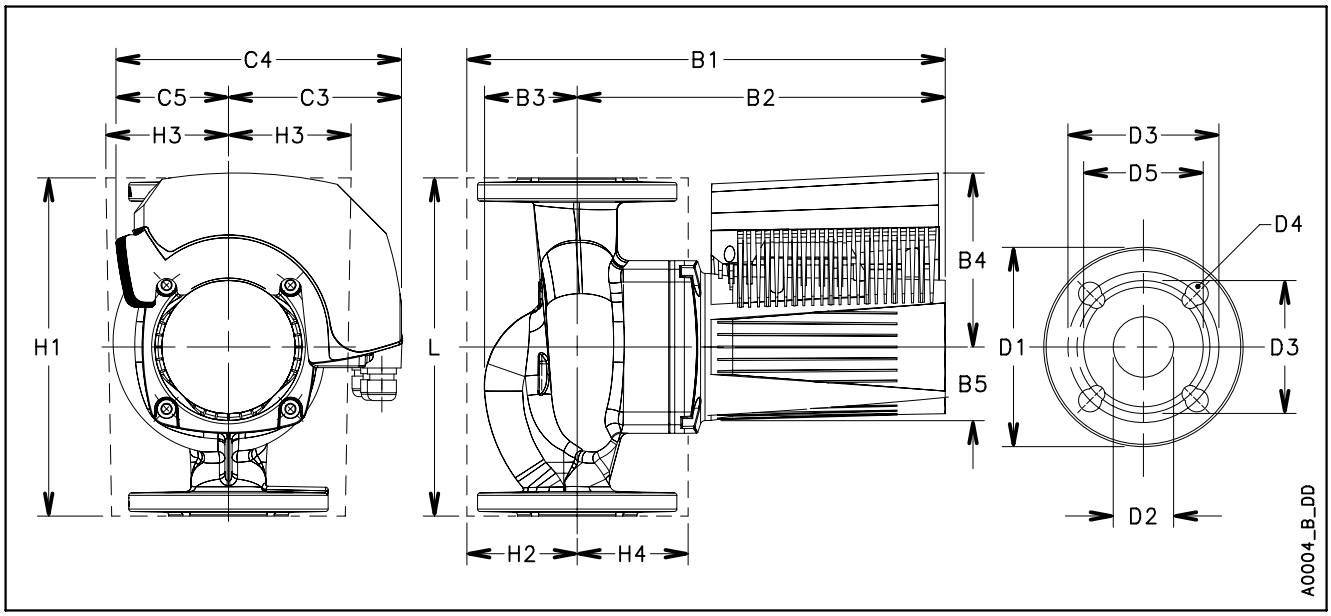

ecocirc XL-XLplus 65-120 F (N)										Dimensions (mm)							**Net weight** 17,9 (Kg) **- Gross weight** 23,2 (Kg)	
L	**G**	**B1**	**B2**	**B3**	**B4**	**B5**	**C3**	**C4**	**C5**	**H1**	**H2**	**H3**	**H4**	**D1**	**D2**	**D3**	**D4**	**D5**
340	DN 65	381	297	84	147	60	148	241	93	340	104	106	104	185	65	130/145	4 x 14/19	118

En-Rev_C

ecocirc XL-XLplus 65-150 F

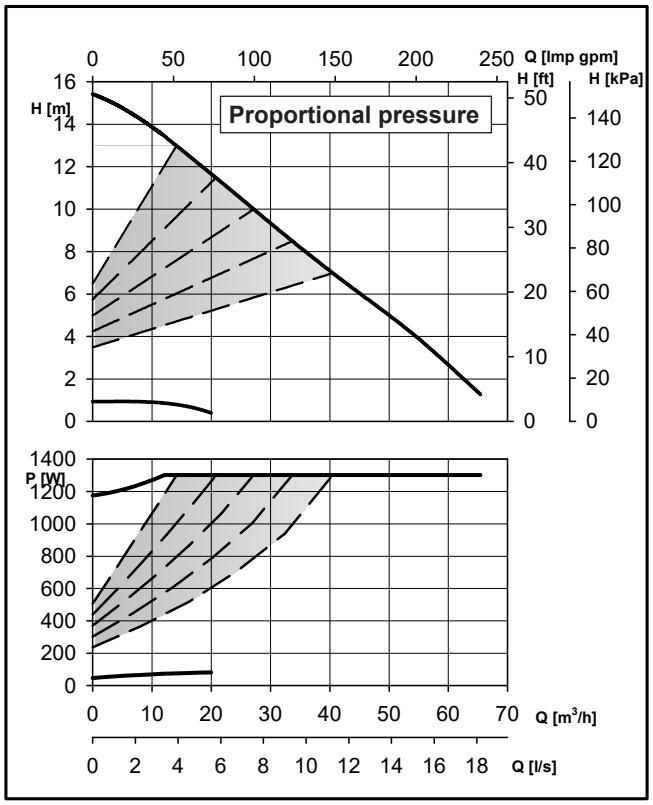

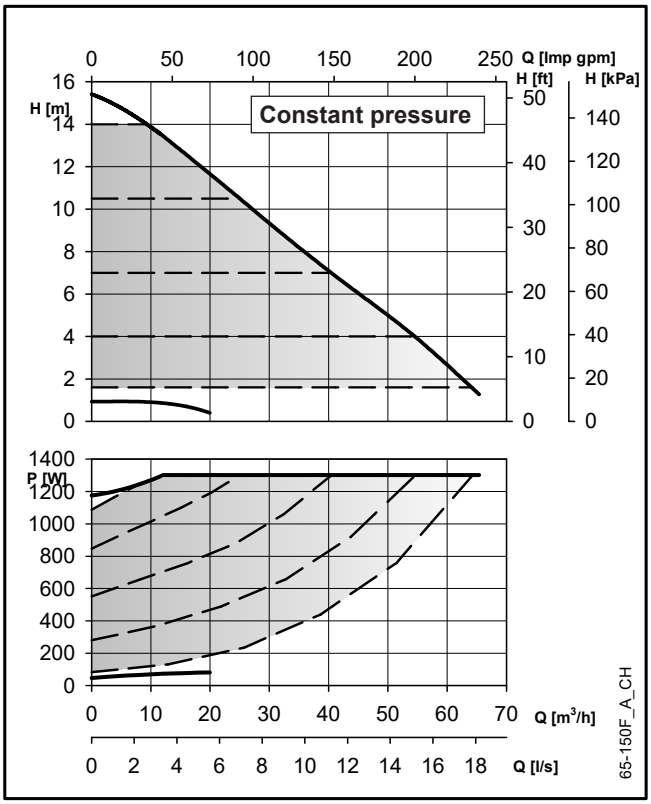

These performances are valid for liquids with density ρ = 1.0 Kg/dm³ and kinematic viscosity ν = 1 mm²/sec.

ecocirc XL-XLplus 65-150 F		Pump Data	
Rated voltage	1 x 230 V ±10%	IP protection	44
Frequency	50/60 Hz	Insulation class	155 (F)
Power absorbed [**W**] (min/max)	47 / 1300	Max. working pressure	1,0 MPa (10 bar)
Input current [**A**] (min/max)	0,4 / 5,9	Liquid temperature	-10°C (14°F) to +110 °C (230°F)
Specific **EEI ≤**	0,23	Sound pressure level	≤ 52 dB(A)

En-Rev_A

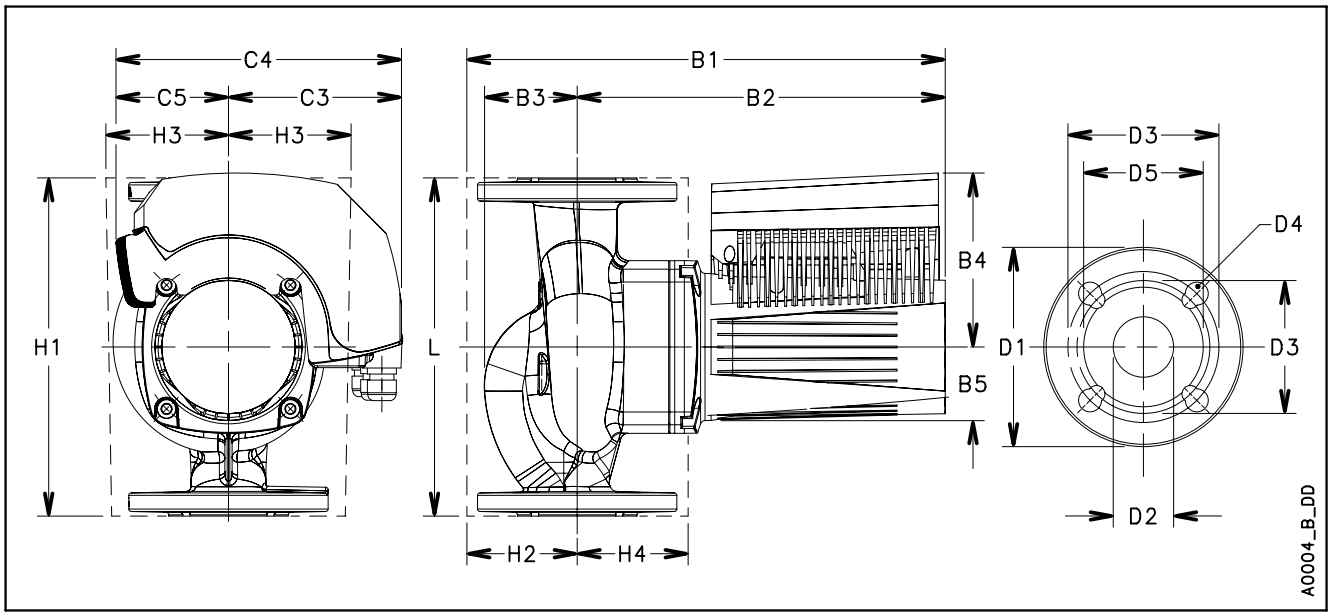

ecocirc XL-XLplus 65-150 F							Dimensions (mm)										Net weight 25,7 (Kg) - Gross weight 29,5 (Kg)
L	**G**	**B1**	**B2**	**B3**	**B4**	**B5**	**C3**	**C4**	**C5**	**H1**	**H2**	**H3**	**H4**	**D1**	**D2**	**D3**	**D4**	**D5**
340	DN 65	397	316	81	147	61	146	242	96	340	101	107/127	107	185	65	145/185	4 x 14/19	118

En-Rev_A

ecocirc XL-XLplus 65-180 F

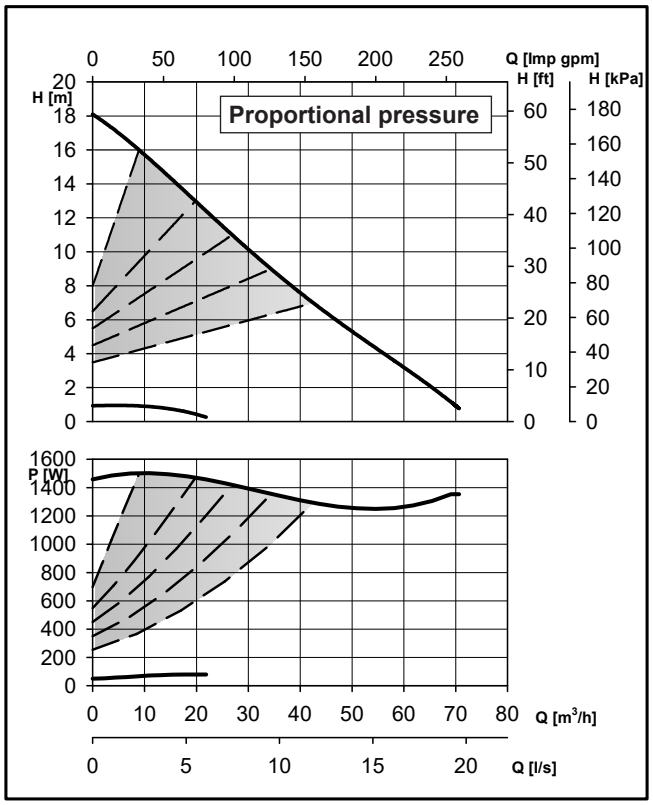

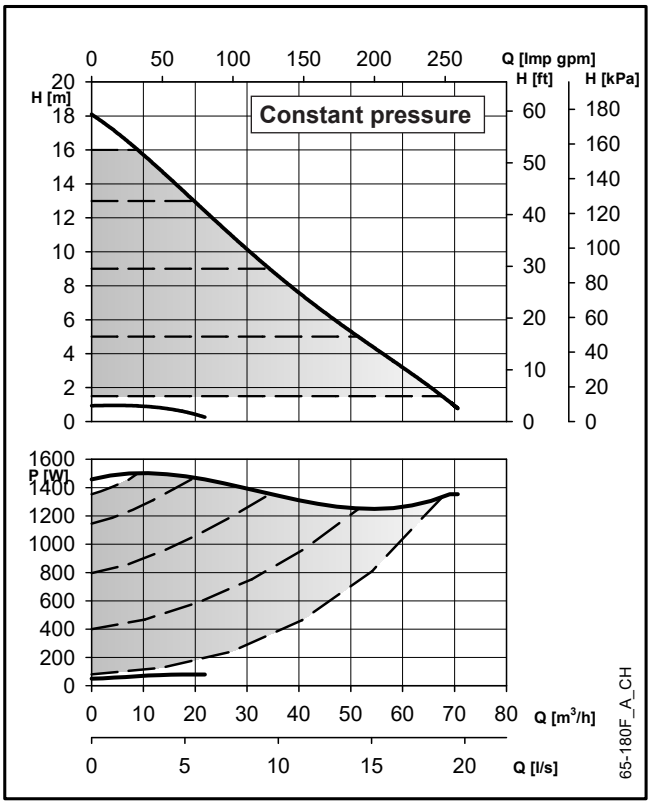

These performances are valid for liquids with density ρ = 1.0 Kg/dm³ and kinematic viscosity ν = 1 mm²/sec.

ecocirc XL-XLplus 65-180 F		Pump Data	
Rated voltage	1 x 230 V ±10%	IP protection	44
Frequency	50/60 Hz	Insulation class	155 (F)
Power absorbed [**W**] (min/max)	50 / 1495	Max. working pressure	1,0 MPa (10 bar)
Input current [**A**] (min/max)	0,4 / 6,6	Liquid temperature	-10°C (14°F) to +110 °C (230°F)
Specific **EEI ≤**	0,23	Sound pressure level	≤ 52 dB(A)

En-Rev_A

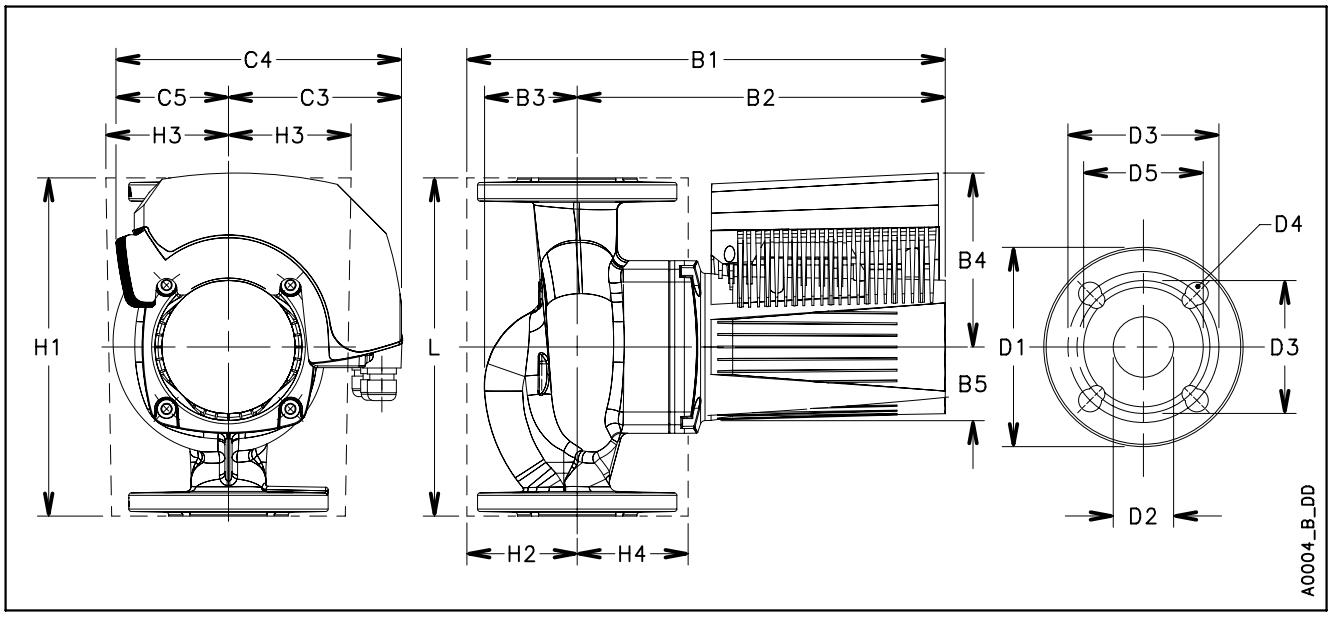

ecocirc XL-XLplus 65-180 F							Dimensions (mm)										Net weight 25,7 (Kg) - Gross weight 29,5 (Kg)
L	**G**	**B1**	**B2**	**B3**	**B4**	**B5**	**C3**	**C4**	**C5**	**H1**	**H2**	**H3**	**H4**	**D1**	**D2**	**D3**	**D4**	**D5**
340	DN 65	397	316	81	147	61	146	242	96	340	101	107/127	107	185	65	145/185	4 x 14/19	118

En-Rev_A

ecocirc XL-XLplus 80-120 F

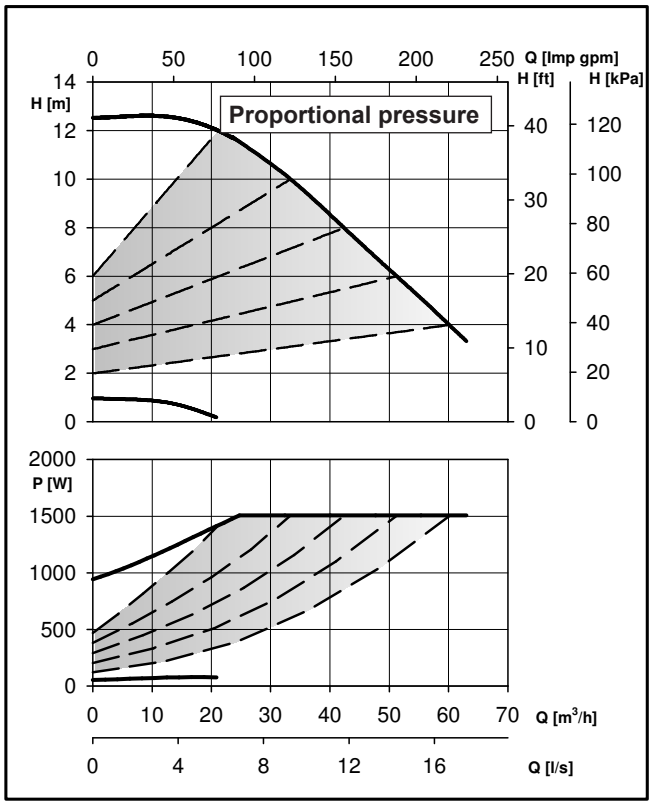

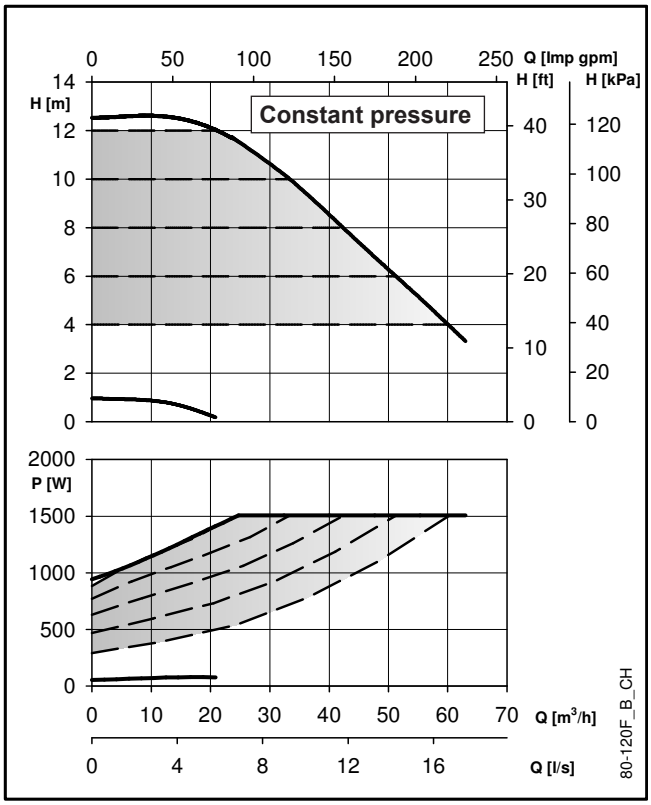

These performances are valid for liquids with density ρ = 1.0 Kg/dm³ and kinematic viscosity ν = 1 mm²/sec..

ecocirc XL-XLplus 80-120 F		Pump Data	
Rated voltage	1 x 230 V ±10%	IP protection	44
Frequency	50/60 Hz	Insulation class	155 (F)
Power absorbed [**W**] (min/max)	55 / 1510	Max. working pressure	0,6 MPa (6 bar) or 1,0 MPa (10 bar)
Input current [**A**] (min/max)	0,4 / 6,6	Liquid temperature	-10°C (14°F) to +110 °C (230°F)
Specific **EEI ≤**	0,23	Sound pressure level	≤ 55 dB(A)

En-Rev_B

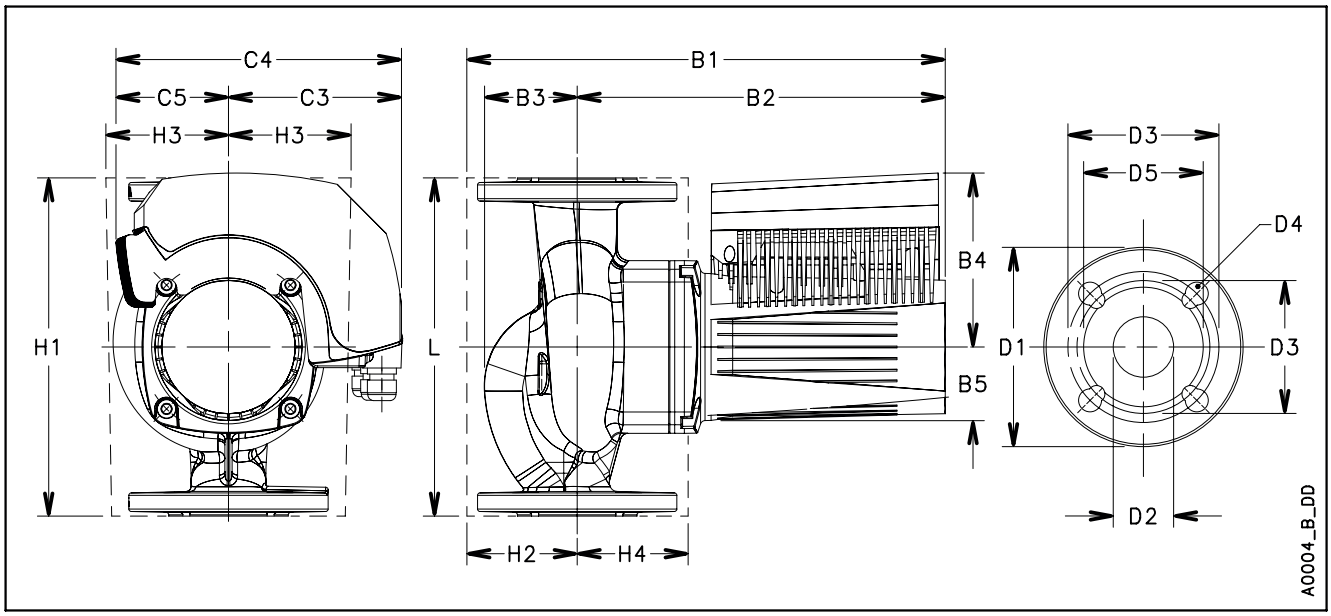

ecocirc XL-XLplus 80-120 F							Dimensions (mm)										Net weight 22,2 (Kg) - Gross weight 27,6 (Kg)	
PN	**L**	**G**	**B1**	**B2**	**B3**	**B4**	**B5**	**C3**	**C4**	**C5**	**H1**	**H2**	**H3**	**H4**	**D1**	**D2**	**D3**	**D4**	**D5**
6	360	DN 80	396	306	90	147	60	148	241	93	360	110	110	110	200	80	150	4 x 19	132
10	360	DN 80	396	306	90	147	60	148	241	93	360	110	110	110	200	80	160	8 x 19	132

En-Rev_B

ecocirc XL-XLplus 100-120 F

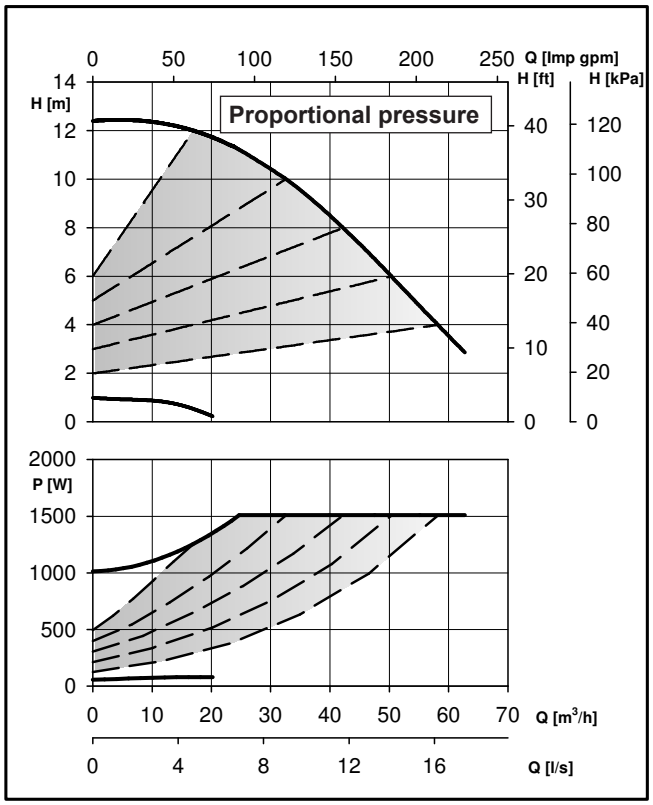

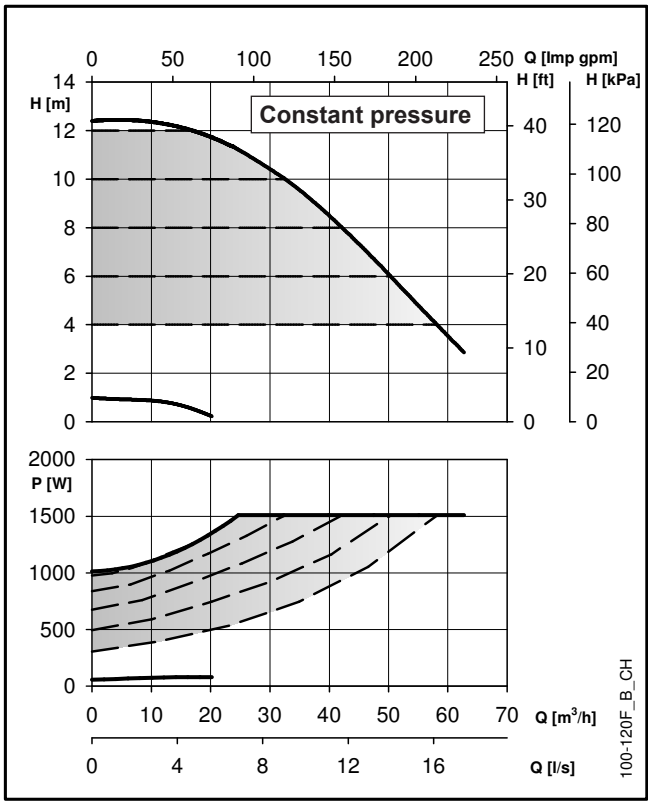

These performances are valid for liquids with density ρ = 1.0 Kg/dm³ and kinematic viscosity ν = 1 mm²/sec.

ecocirc XL-XLplus 100-120 F		Pump Data	
Rated voltage	1 x 230 V ±10%	IP protection	44
Frequency	50/60 Hz	Insulation class	155 (F)
Power absorbed [**W**] (min/max)	57 / 1510	Max. working pressure	0,6 MPa (6 bar) or 1,0 MPa (10 bar)
Input current [**A**] (min/max)	0,4 / 6,6	Liquid temperature	-10°C (14°F) to +110 °C (230°F)
Specific **EEI ≤**	0,23	Sound pressure level	≤ 55 dB(A)

En-Rev_B

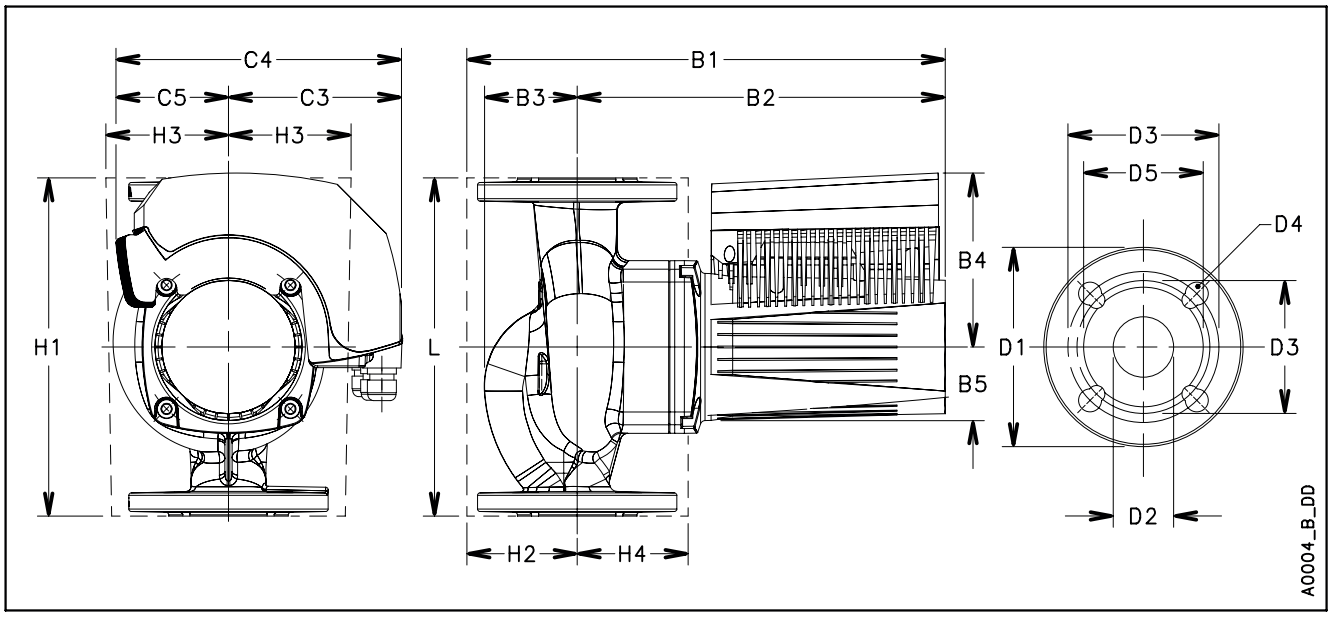

ecocirc XL-XLplus 100-120 F									Dimensions (mm)									Net weight 26,2 (Kg) - Gross weight 31,6 (Kg)	
PN	**L**	**G**	**B1**	**B2**	**B3**	**B4**	**B5**	**C3**	**C4**	**C5**	**H1**	**H2**	**H3**	**H4**	**D1**	**D2**	**D3**	**D4**	**D5**
6	360	DN 100	403	306	97	147	60	148	241	93	360	120	120	120	220	100	170	4 x 19	156
10	360	DN 100	403	306	97	147	60	148	241	93	360	120	120	120	220	100	180	8 x 19	156

En-Rev_B

ecocirc XL-XLplus D32-80

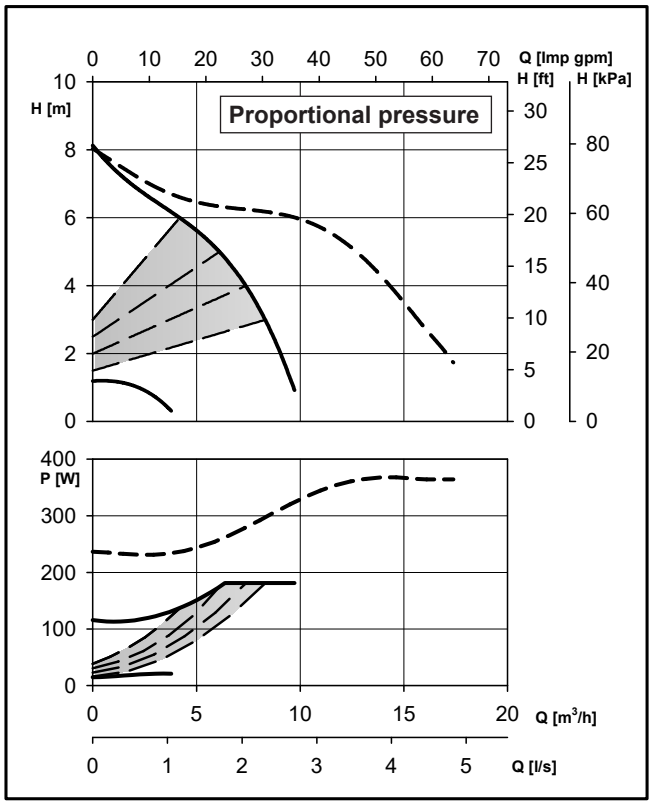

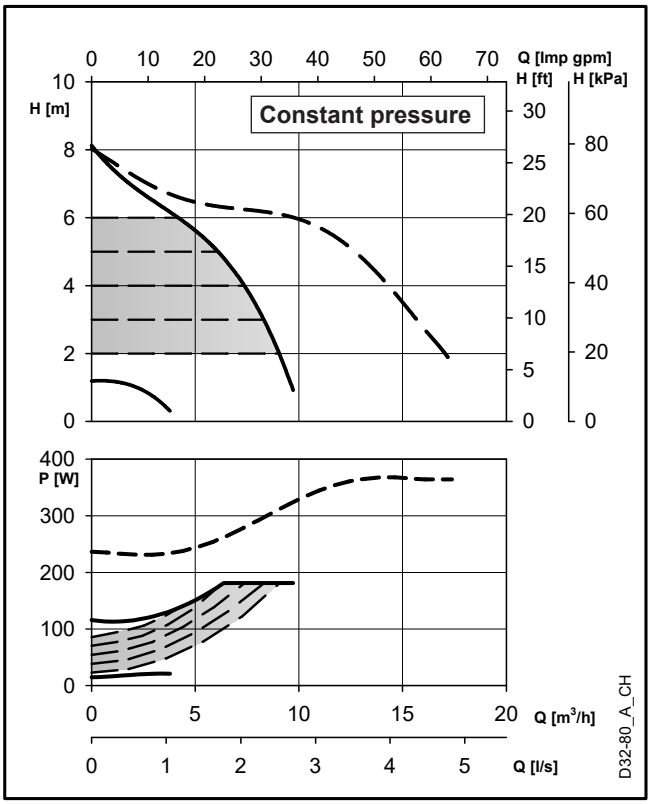

These performances are valid for liquids with density ρ = 1.0 Kg/dm³ and kinematic viscosity ν = 1 mm²/sec.

ecocirc XL-XLplus D32-80		Pump Data	
Rated voltage	1 x 230 V ±10%	IP protection	44
Frequency	50/60 Hz	Insulation class	155 (F)
Power absorbed [**W**] (min/max)	16 / 190	Max. working pressure	1,0 MPa (10 bar)
Input current [**A**] (min/max)	0,1 / 1,4	Liquid temperature	-10°C (14°F) to +110 °C (230°F)
Specific **EEI ≤**	0,23	Sound pressure level	≤ 45 dB(A)

En-Rev_B

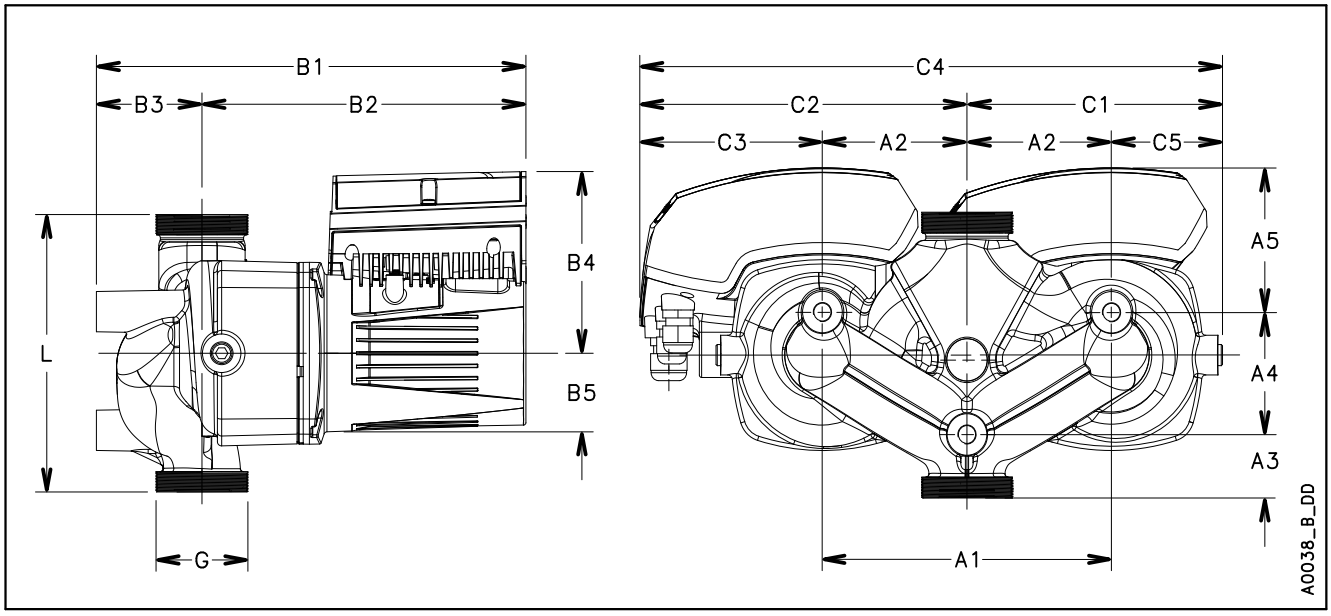

ecocirc XL-XLplus D32-80				Dimensions (mm)							**Net weight** 20,5 (Kg) **- Gross weight** 28 (Kg)				
L	**G**	**B1**	**B2**	**B3**	**B4**	**C1**	**C2**	**C3**	**C4**	**C5**	**A1**	**A2**	**A3**	**A4**	**A5**
180	G 2 – Rp 1 ¼	279	210	69	118	165	215	120	380	70	190	95	40	77	91

En-Rev_B

ecocirc XL-XLplus D32-100

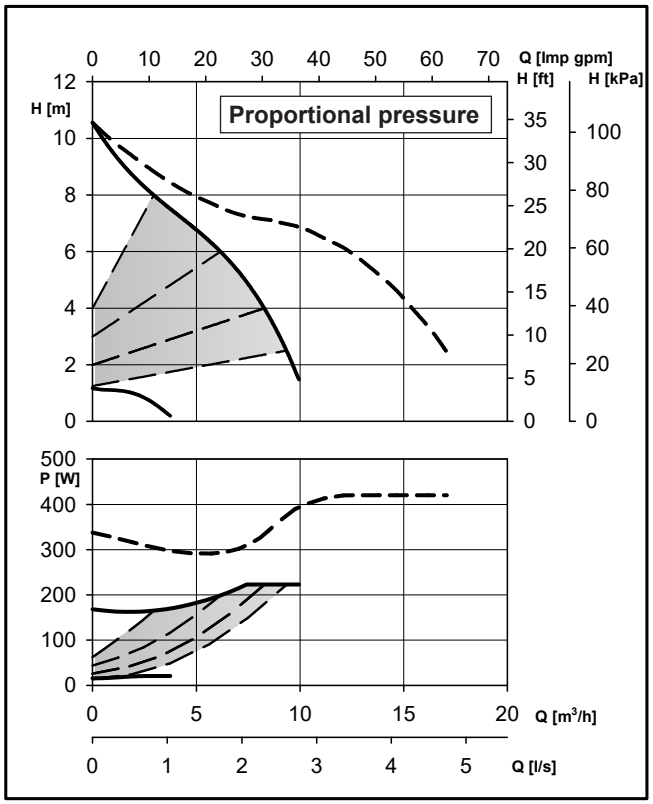

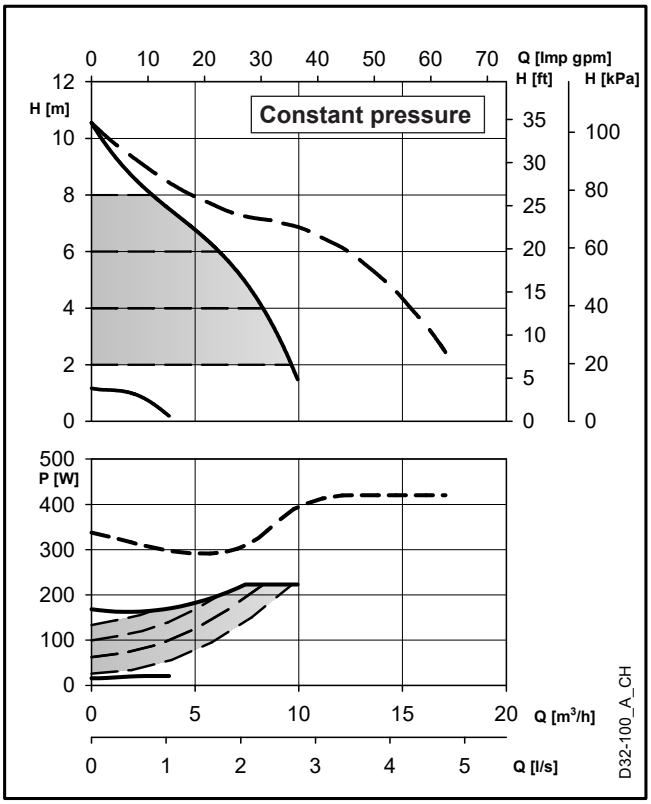

These performances are valid for liquids with density ρ = 1.0 Kg/dm³ and kinematic viscosity ν = 1 mm²/sec.

ecocirc XL-XLplus D32-100		Pump Data	
Rated voltage	1 x 230 V ±10%	IP protection	44
Frequency	50/60 Hz	Insulation class	155 (F)
Power absorbed [**W**] (min/max)	16 / 220	Max. working pressure	1,0 MPa (10 bar)
Input current [**A**] (min/max)	0,1 / 1,6	Liquid temperature	-10°C (14°F) to +110 °C (230°F)
Specific **EEI ≤**	0,23	Sound pressure level	≤ 45 dB(A)

En-Rev_B

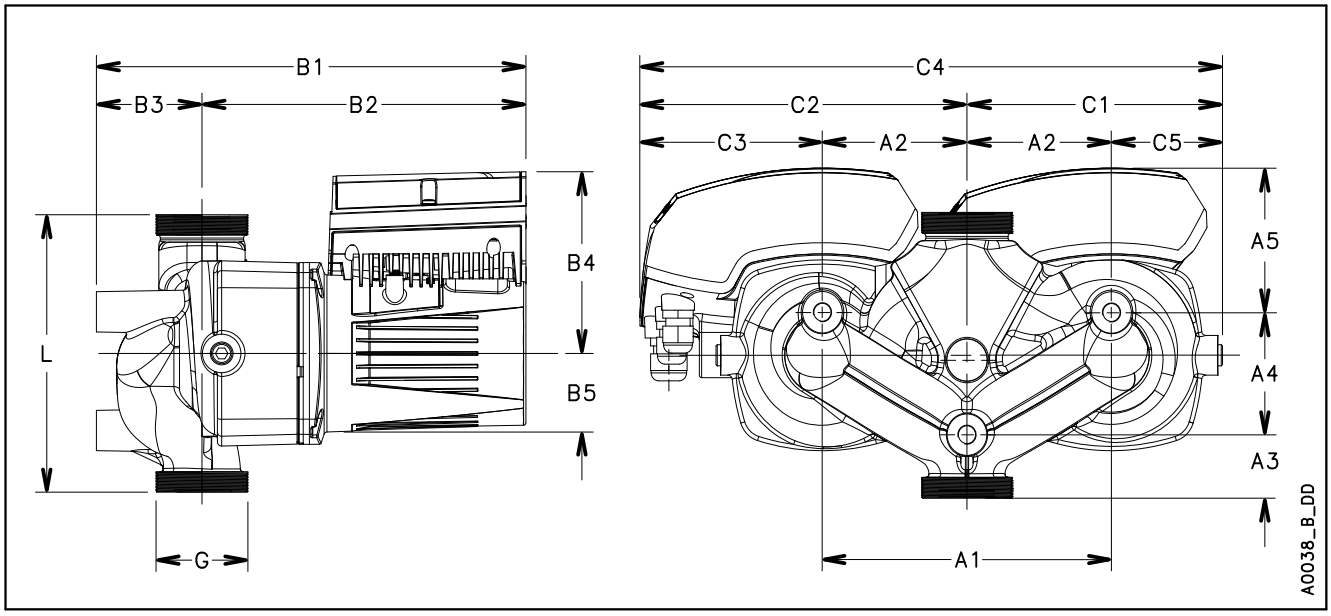

ecocirc XL-XLplus D32-80					Dimensions (mm)						**Net weight** 20,5 (Kg) **- Gross weight** 28 (Kg)				
L	**G**	**B1**	**B2**	**B3**	**B4**	**C1**	**C2**	**C3**	**C4**	**C5**	**A1**	**A2**	**A3**	**A4**	**A5**
180	G 2 – Rp 1 ¼	279	210	69	118	165	215	120	380	70	190	95	40	77	91

En-Rev_B

ecocirc XL-XLplus D32-80 F

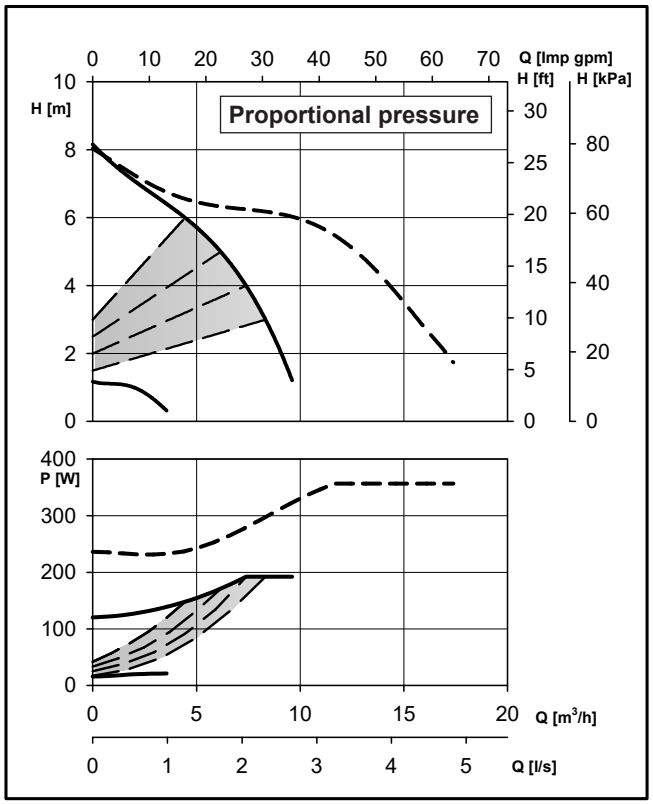

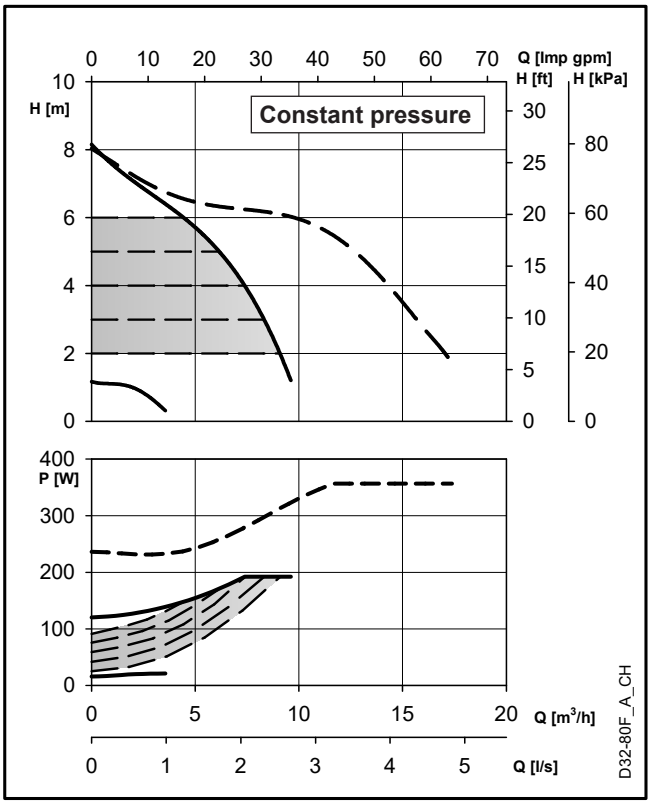

These performances are valid for liquids with density ρ = 1.0 Kg/dm³ and kinematic viscosity ν = 1 mm²/sec.

ecocirc XL-XLplus D32-80 F		Pump Data	
Rated voltage	1 x 230 V ±10%	IP protection	44
Frequency	50/60 Hz	Insulation class	155 (F)
Power absorbed [**W**] (min/max)	15 / 180	Max. working pressure	1,0 MPa (10 bar)
Input current [**A**] (min/max)	0,1 / 1,3	Liquid temperature	-10°C (14°F) to +110 °C (230°F)
Specific **EEI ≤**	0,23	Sound pressure level	≤ 45 dB(A)

En-Rev_B

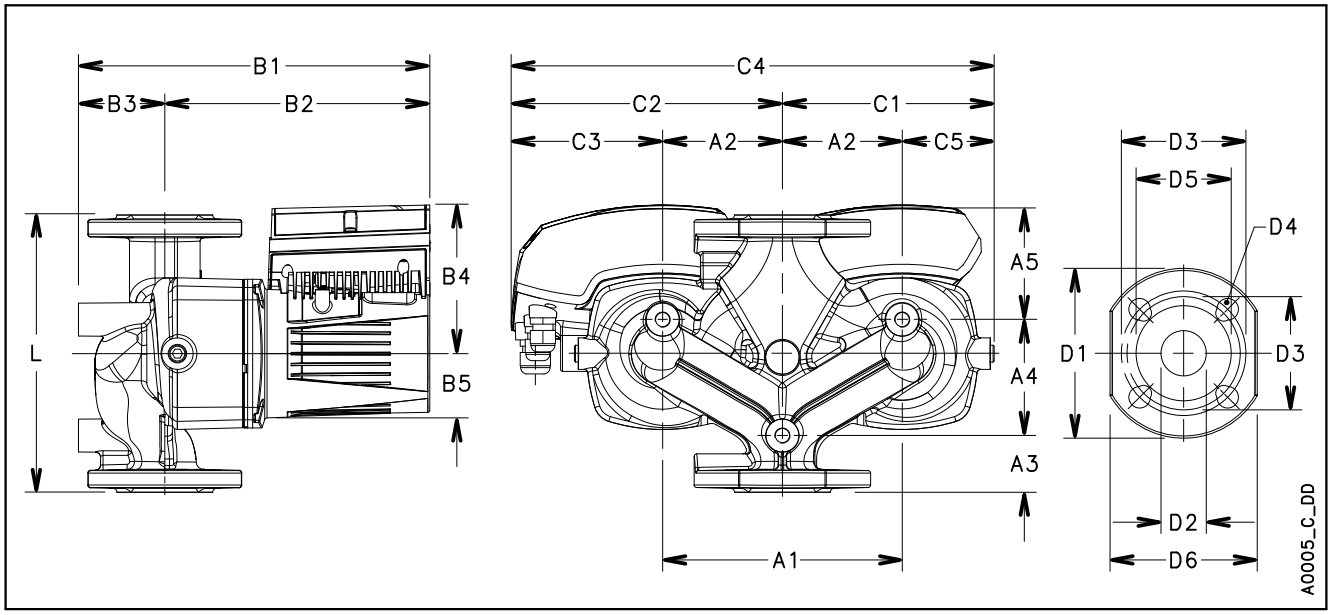

ecocirc XL-XLplus D32-80 F							Dimensions (mm)										Net weight 21,2 (Kg) - Gross weight 28,7 (Kg)				
L	**G**	**B1**	**B2**	**B3**	**B4**	**B5**	**C1**	**C2**	**C3**	**C4**	**C5**	**A1**	**A2**	**A3**	**A4**	**A5**	**D1**	**D2**	**D3**	**D4**	**D5**
220	DN 32	279	210	69	118	51	165	215	120	380	70	190	95	45	92	83	140	36	90/100	4 x 14/19	76

En-Rev_B

ecocirc XL-XLplus D32-100 F

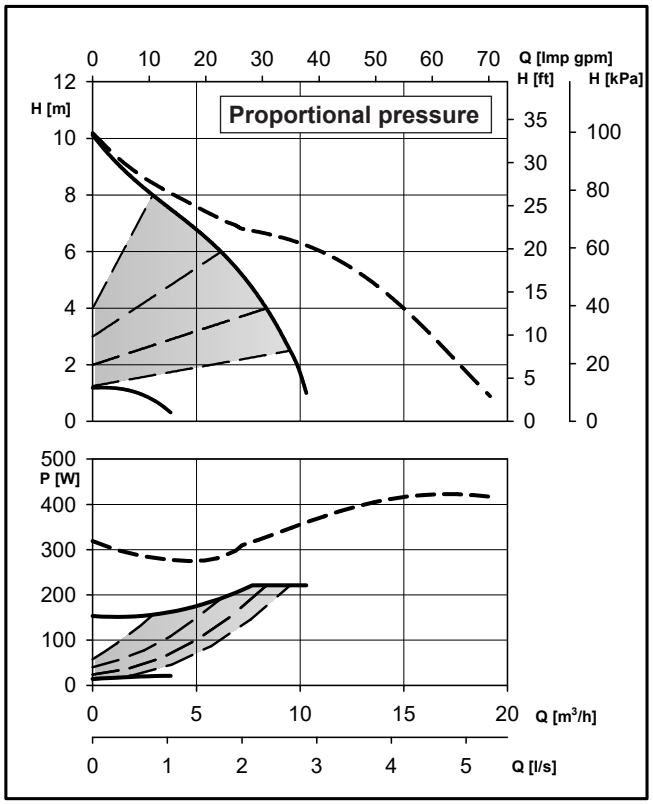

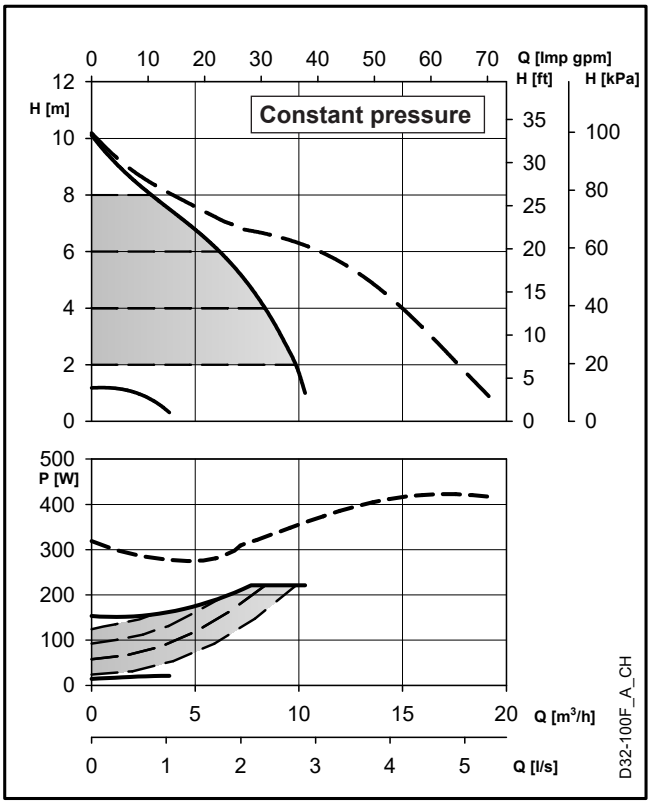

These performances are valid for liquids with density ρ = 1.0 Kg/dm³ and kinematic viscosity ν = 1 mm²/sec.

ecocirc XL-XLplus D32-100 F		Pump Data	
Rated voltage	1 x 230 V ±10%	IP protection	44
Frequency	50/60 Hz	Insulation class	155 (F)
Power absorbed [**W**] (min/max)	15 / 220	Max. working pressure	1,0 MPa (10 bar)
Input current [**A**] (min/max)	0,1 / 1,6	Liquid temperature	-10°C (14°F) to +110 °C (230°F)
Specific **EEI ≤**	0,23	Sound pressure level	≤ 45 dB(A)

En-Rev_B

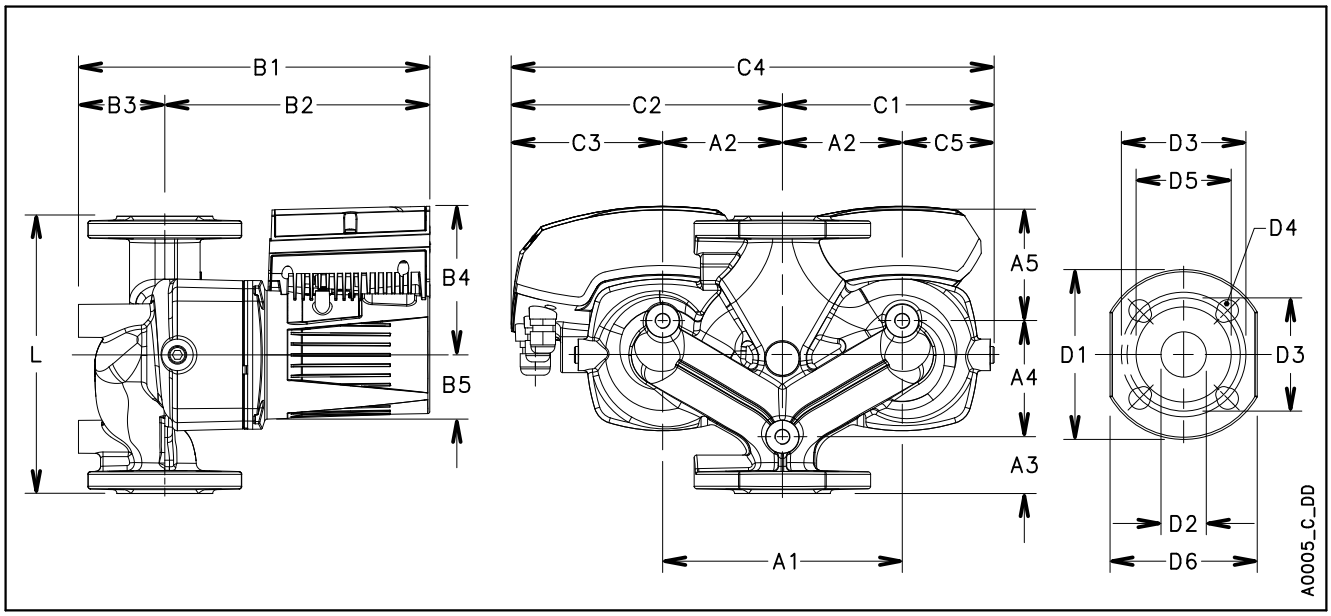

ecocirc XL-XLplus D32-100 F							Dimensions (mm)												Net weight 21,2 (Kg) - Gross weight 28,7 (Kg)		
L	**G**	**B1**	**B2**	**B3**	**B4**	**B5**	**C1**	**C2**	**C3**	**C4**	**C5**	**A1**	**A2**	**A3**	**A4**	**A5**	**D1**	**D2**	**D3**	**D4**	**D5**
220	DN 32	279	210	69	118	51	165	215	120	380	70	190	95	45	92	83	140	36	90/100	4 x 14/19	76

En-Rev_B

ecocirc XL-XLplus D32-120 F

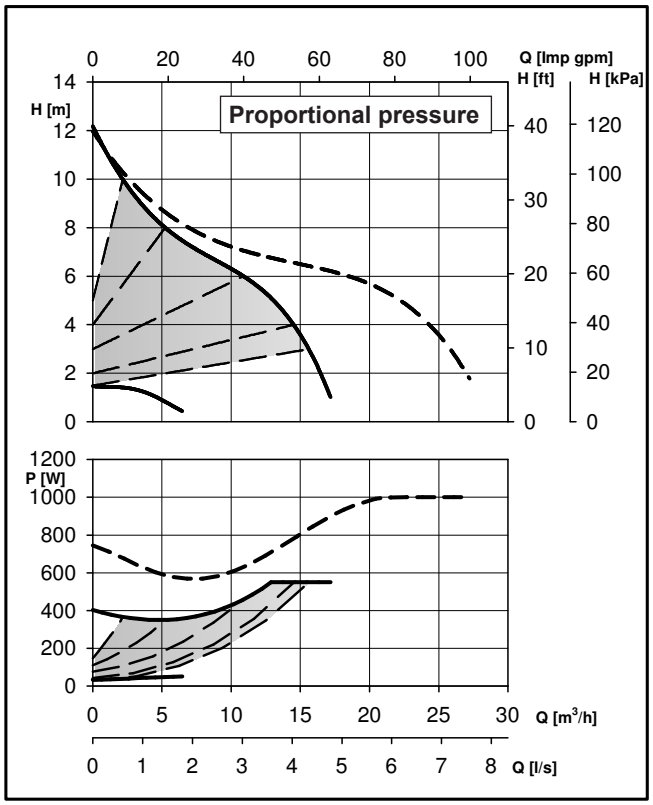

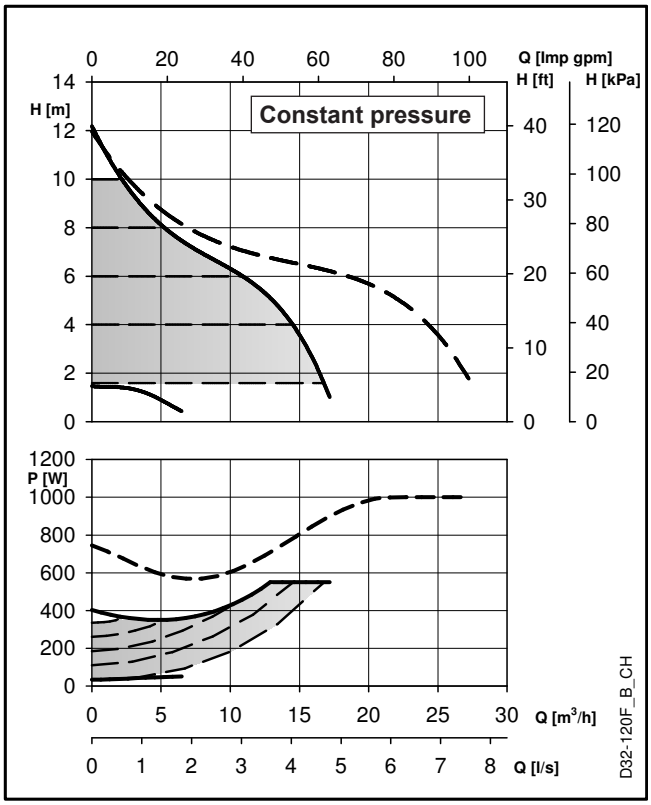

These performances are valid for liquids with density ρ = 1.0 Kg/dm³ and kinematic viscosity ν = 1 mm²/sec.

ecocirc XL-XLplus D32-120 F		Pump Data	
Rated voltage	1 x 230 V ±10%	IP protection	44
Frequency	50/60 Hz	Insulation class	155 (F)
Power absorbed [**W**] (min/max)	30 / 530	Max. working pressure	1,0 MPa (10 bar)
Input current [**A**] (min/max)	0,2 / 2,3	Liquid temperature	-10°C (14°F) to +110 °C (230°F)
Specific **EEI ≤**	0,23	Sound pressure level	≤ 48 dB(A)

En-Rev_E

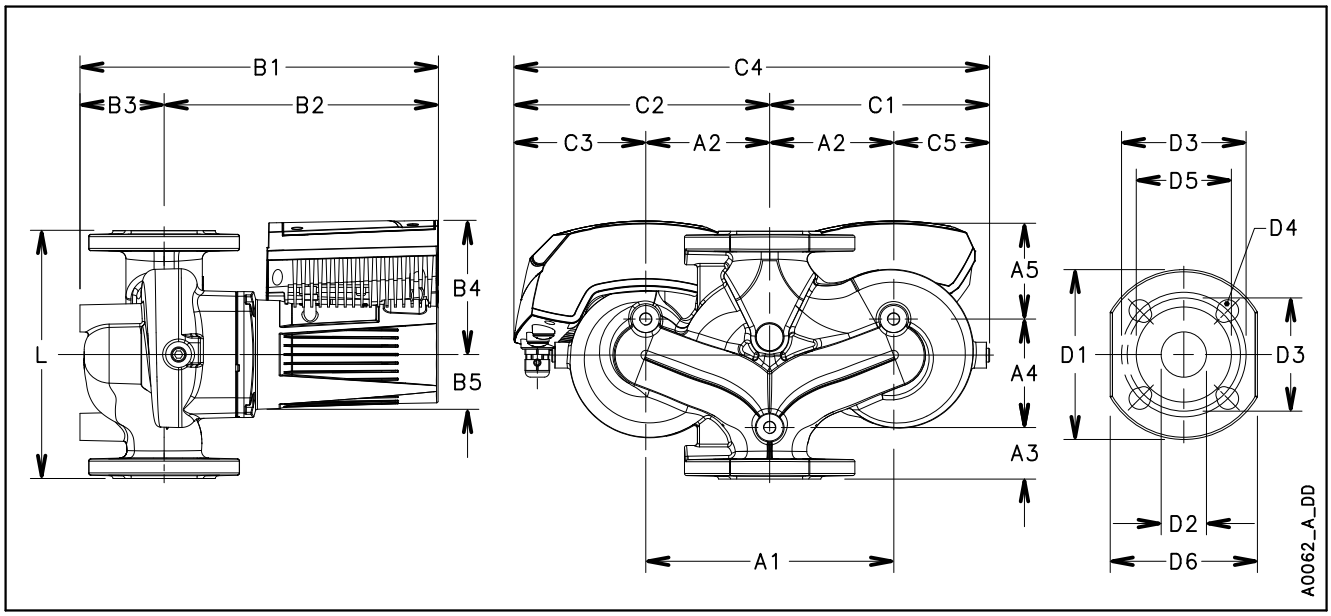

ecocirc XL-XLplus D32-120 F							Dimensions (mm)												Net weight 27,4 (Kg) - Gross weight 34,9 (Kg)	
L	**G**	**B1**	**B2**	**B3**	**B4**	**B5**	**C1**	**C2**	**C3**	**C4**	**C5**	**A1**	**A2**	**A3**	**A4**	**A5**	**D1**	**D2**	**D3**	**D4**	**D5**
220	DN 32	322	252	70	132	53	186	235,5	128	421,5	78,5	215	107,5	43	97	80	140	32	90/100	4 x 14/19	76

It-Rev_B

ecocirc XL D40-80.11 F

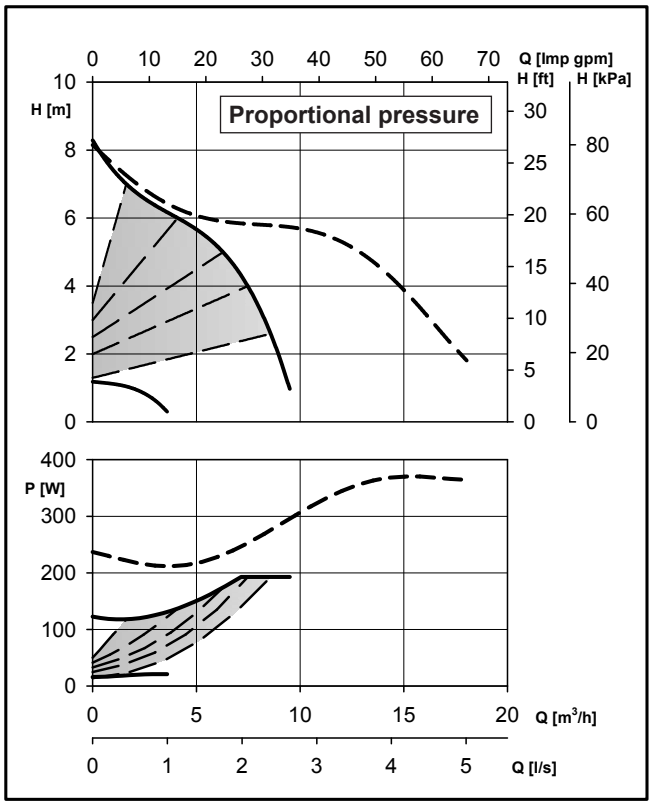

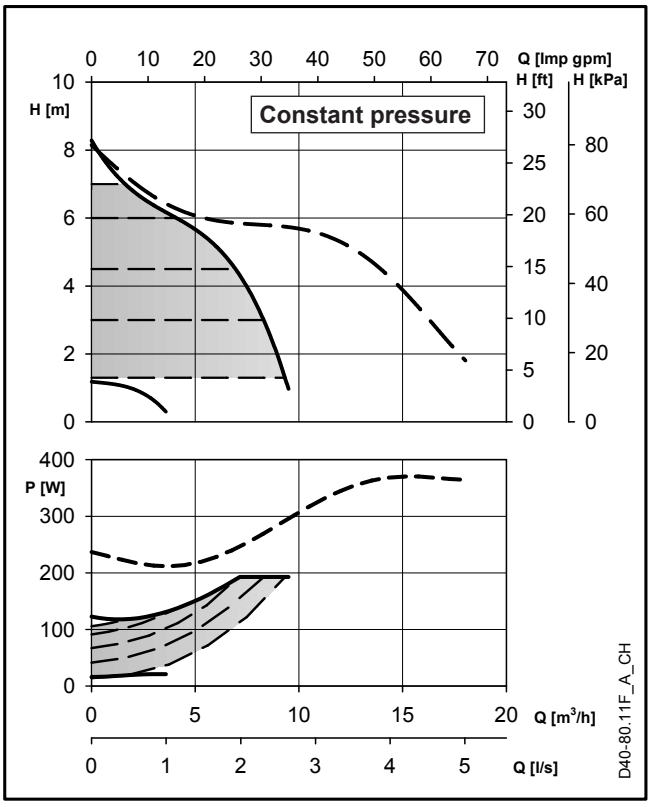

These performances are valid for liquids with density ρ = 1.0 Kg/dm³ and kinematic viscosity ν = 1 mm²/sec.

ecocirc XL D40-80.11 F		Pump Data	
Rated voltage	1 x 230 V ±10%	Insulation class	155 (F)
Frequency	50/60 Hz	Max. working pressure	1,0 MPa (10 bar)
Power absorbed [**W**] (min/max)	16 / 194	Liquid temperature	-10°C (14°F) to +110°C (230°F) for heating pumps
Input current [**A**] (min/max)	0,2 / 1,4		-10°C (14°F) to +85°C (185°F) for domestic hot water pumps
Specific **EEI ≤**	0,23	Sound pressure level	≤ 43 dB(A)
IP protection	44		

En-Rev_A

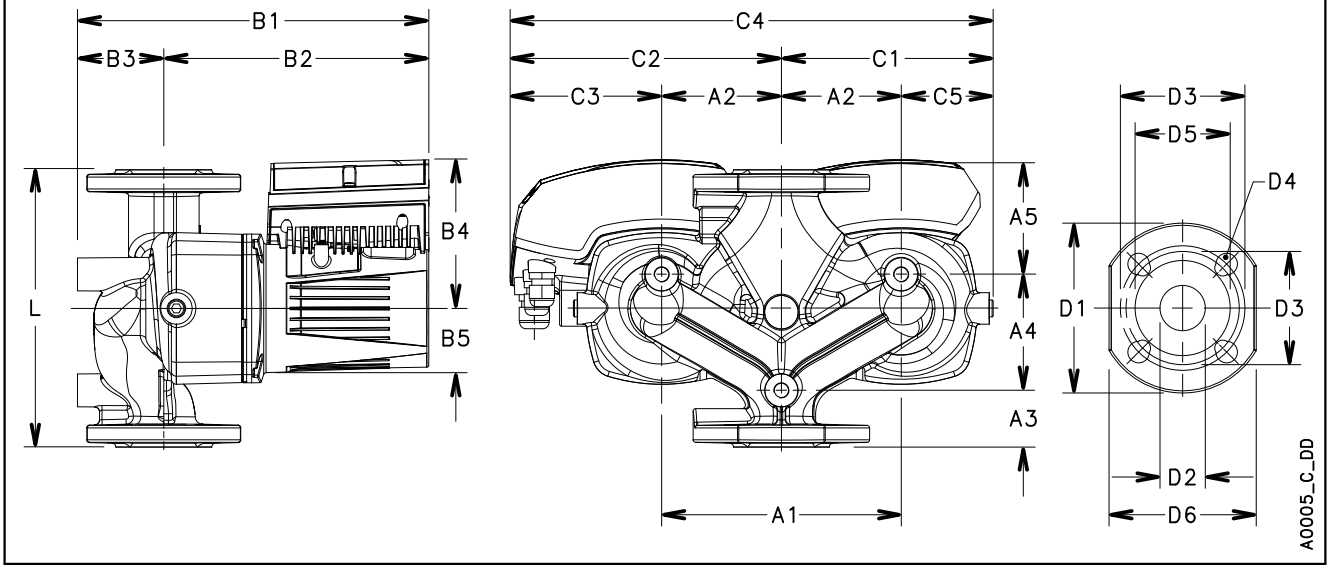

ecocirc XL D40-80.11 F							Dimensions (mm)												Net weight 21,2 (Kg) - Gross weight 28,7 (Kg)		
L	**G**	**B1**	**B2**	**B3**	**B4**	**B5**	**C1**	**C2**	**C3**	**C4**	**C5**	**A1**	**A2**	**A3**	**A4**	**A5**	**D1**	**D2**	**D3**	**D4**	**D5**
220	DN 40	274	212	62	118	51	164	211	116	375	69	190	95	45	92	83	150	40	100/110	4 x 14/19	84

It-Rev_B

ecocirc XL-XLplus D40-80 F

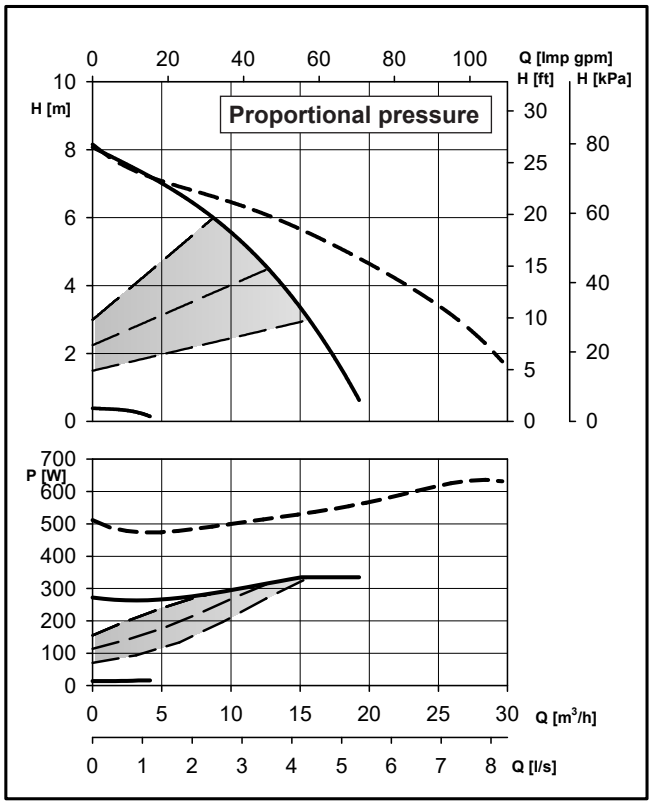

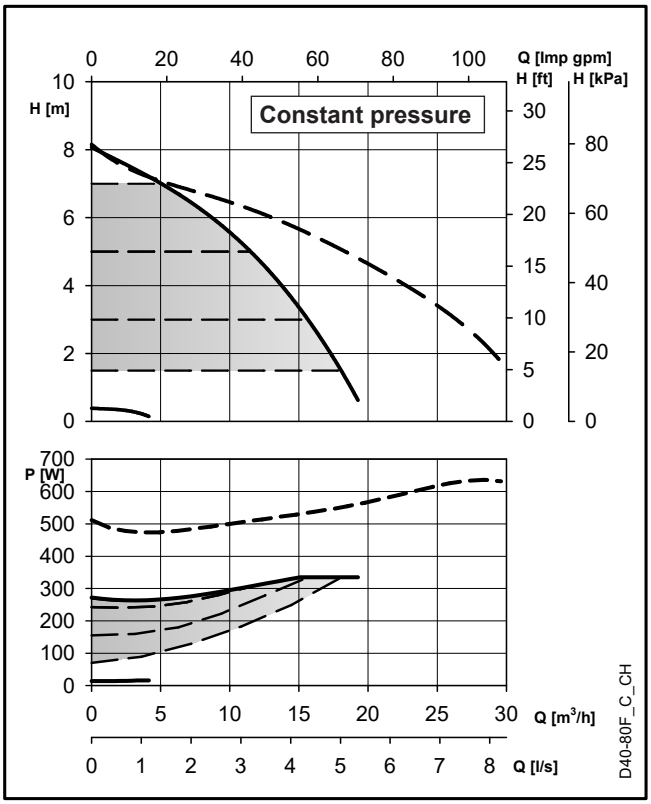

These performances are valid for liquids with density ρ = 1.0 Kg/dm³ and kinematic viscosity ν = 1 mm²/sec.

ecocirc XL-XLplus D40-80 F		Pump Data	
Rated voltage	1 x 230 V ±10%	IP protection	44
Frequency	50/60 Hz	Insulation class	155 (F)
Power absorbed [**W**] (min/max)	14 / 335	Max. working pressure	1,0 MPa (10 bar)
Input current [**A**] (min/max)	0,1 / 1,5	Liquid temperature	-10°C (14°F) to +110 °C (230°F)
Specific **EEI ≤**	0,23	Sound pressure level	≤ 48 dB(A)

En-Rev_E

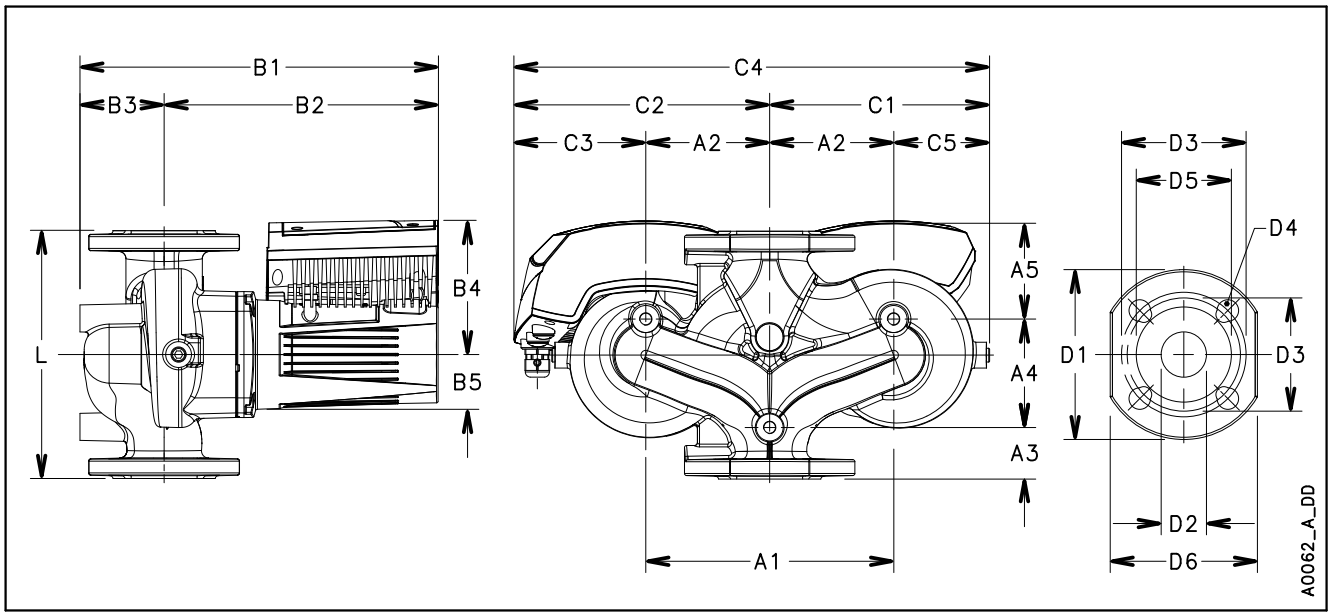

ecocirc XL-XLplus D40-80 F									Dimensions (mm)										Net weight 27,8 (Kg) - Gross weight 35,3 (Kg)		
L	**G**	**B1**	**B2**	**B3**	**B4**	**B5**	**C1**	**C2**	**C3**	**C4**	**C5**	**A1**	**A2**	**A3**	**A4**	**A5**	**D1**	**D2**	**D3**	**D4**	**D5**
220	DN 40	330	259	71	130	51	189,5	235	128	424,5	82,5	215	107,5	45	95	80	150	45	100/110	4 x 14/19	84

En-Rev_C

ecocirc XL D40-100.12 F

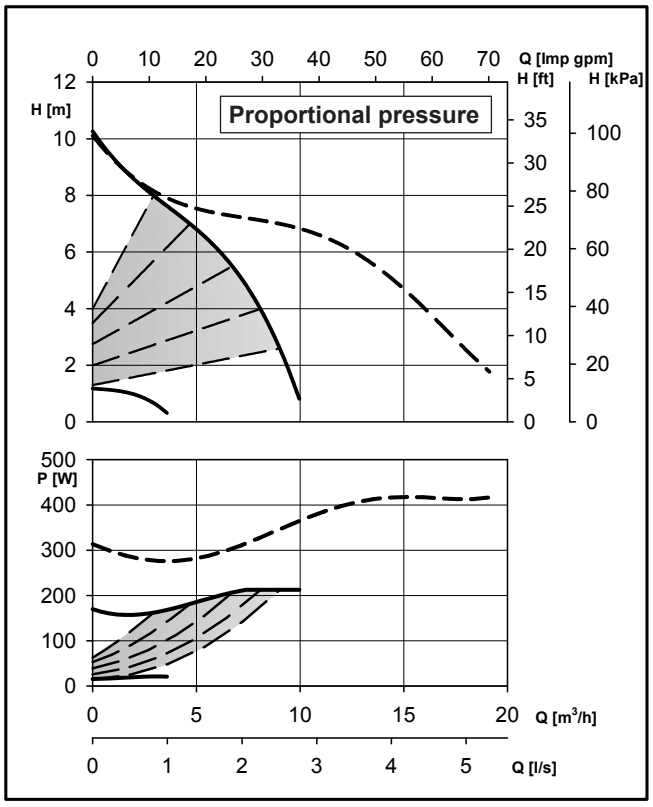

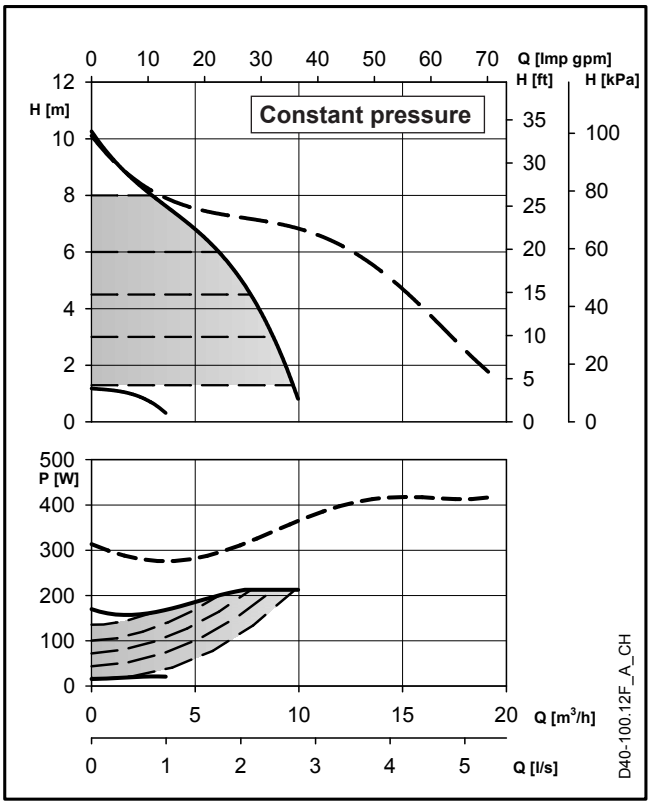

These performances are valid for liquids with density ρ = 1.0 Kg/dm³ and kinematic viscosity ν = 1 mm²/sec.

ecocirc XL D40-100.12 F		Pump Data	
Rated voltage	1 x 230 V ±10%	Insulation class	155 (F)
Frequency	50/60 Hz	Max. working pressure	1,0 MPa (10 bar)
Power absorbed [**W**] (min/max)	17 / 222	Liquid temperature	-10°C (14°F) to +110°C (230°F) for heating pumps
Input current [**A**] (min/max)	0,2 / 1,6		-10°C (14°F) to +85°C (185°F) for domestic hot water pumps
Specific **EEI ≤**	0,23	Sound pressure level	≤ 43 dB(A)
IP protection	44		

En-Rev_A

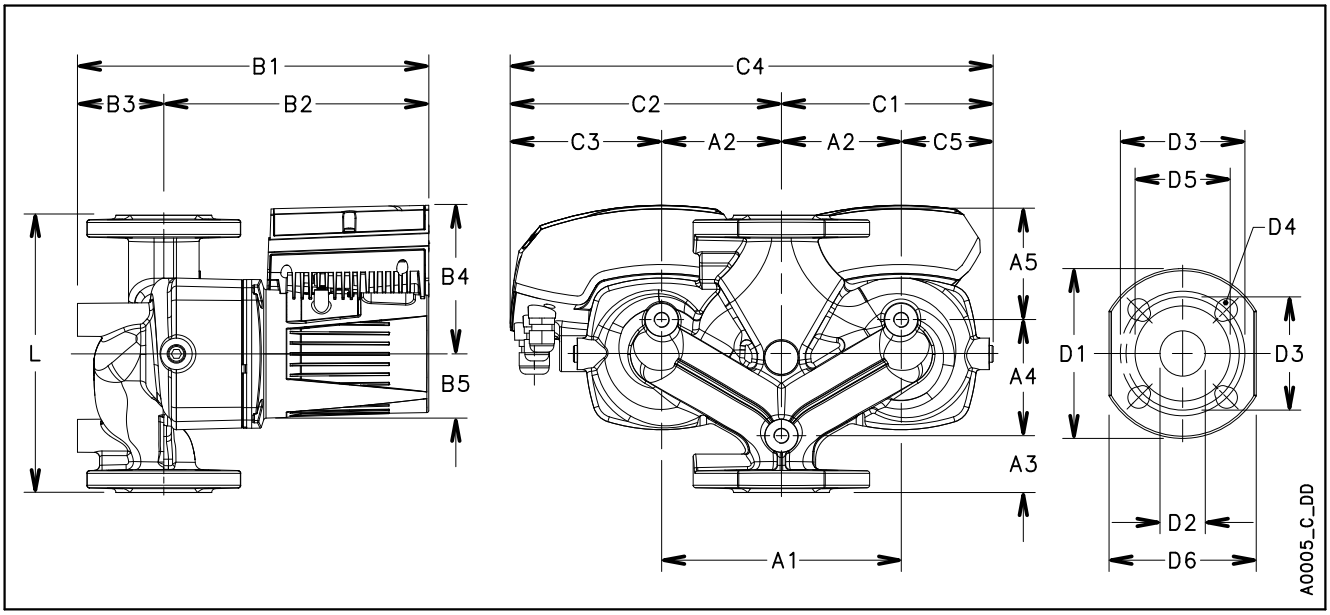

ecocirc XL D40-100.12 F							Dimensions (mm)												Net weight 21,2 (Kg) - Gross weight 28,7 (Kg)		
L	**G**	**B1**	**B2**	**B3**	**B4**	**B5**	**C1**	**C2**	**C3**	**C4**	**C5**	**A1**	**A2**	**A3**	**A4**	**A5**	**D1**	**D2**	**D3**	**D4**	**D5**
220	DN 40	274	212	62	118	51	164	211	116	375	69	190	95	45	92	83	150	40	100/110	4 x 14/19	84

En-Rev_B

ecocirc XL-XLplus D40-100 F

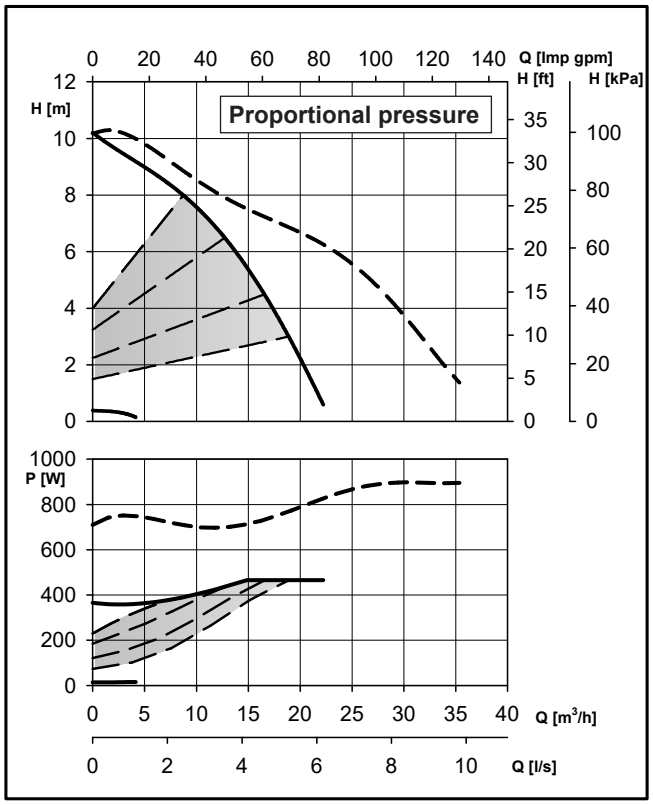

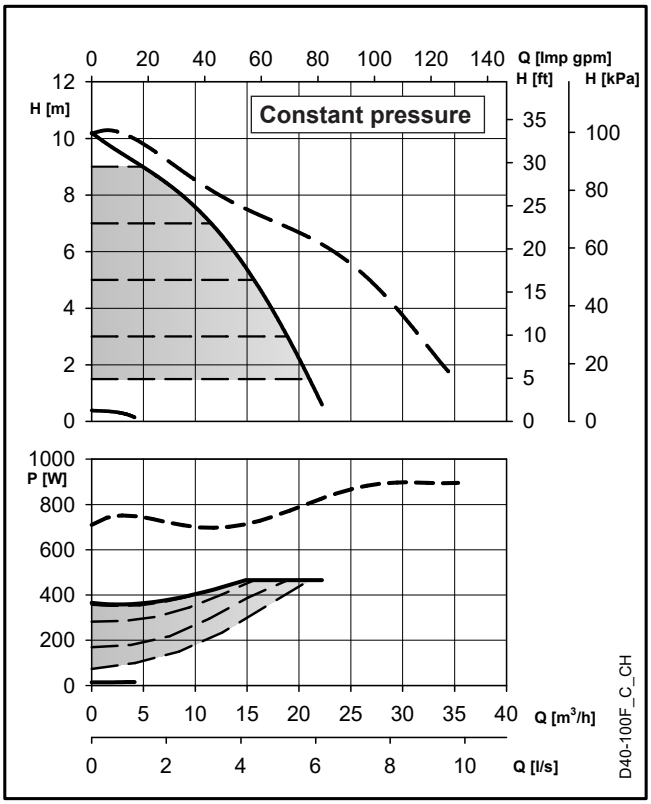

These performances are valid for liquids with density ρ = 1.0 Kg/dm³ and kinematic viscosity ν = 1 mm²/sec.

ecocirc XL-XLplus D40-100 F		Pump Data	
Rated voltage	1 x 230 V ±10%	IP protection	44
Frequency	50/60 Hz	Insulation class	155 (F)
Power absorbed [**W**] (min/max)	14 / 466	Max. working pressure	1,0 MPa (10 bar)
Input current [**A**] (min/max)	0,1 / 2,0	Liquid temperature	-10°C (14°F) to +110 °C (230°F)
Specific **EEI ≤**	0,23	Sound pressure level	≤ 48 dB(A)

En-Rev_E

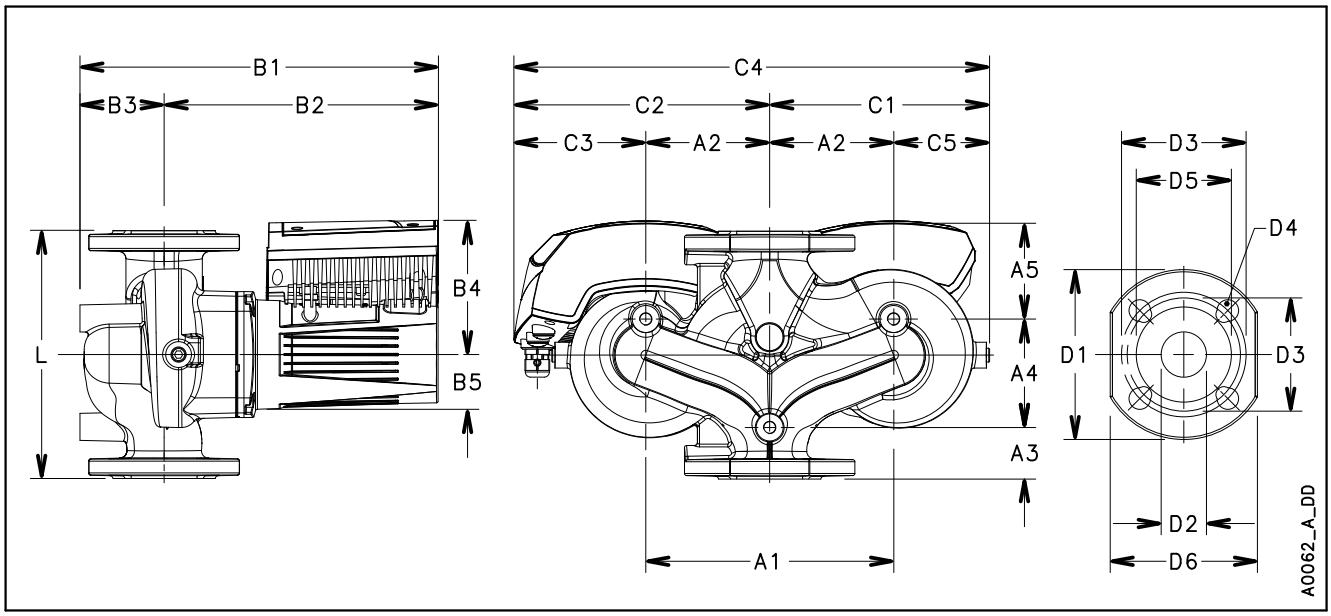

ecocirc XL-XLplus D40-100 F							Dimensions (mm)												Net weight 27,8 (Kg) - Gross weight 35,3 (Kg)	
L	**G**	**B1**	**B2**	**B3**	**B4**	**B5**	**C1**	**C2**	**C3**	**C4**	**C5**	**A1**	**A2**	**A3**	**A4**	**A5**	**D1**	**D2**	**D3**	**D4**	**D5**
220	DN 40	330	259	71	130	51	189,5	235	128	424,5	82,5	215	107,5	45	95	80	150	45	100/110	4 x 14/19	84

En-Rev_C

ecocirc XL-XLplus D40-120 F

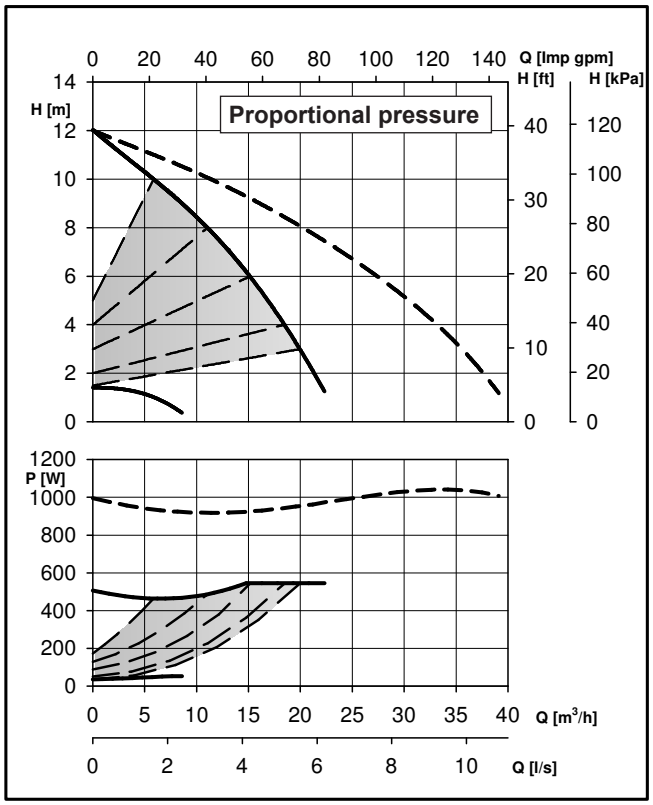

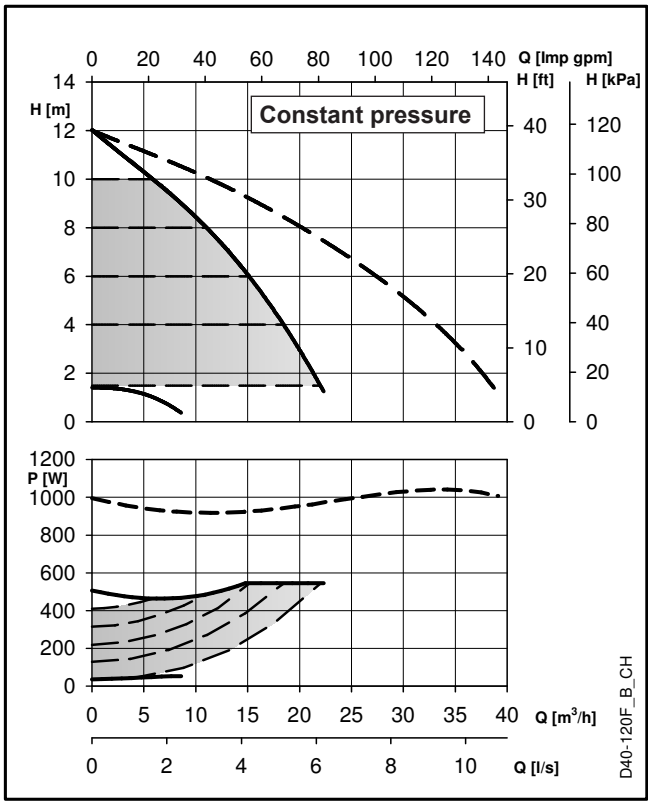

These performances are valid for liquids with density ρ = 1.0 Kg/dm³ and kinematic viscosity ν = 1 mm²/sec.

ecocirc XL-XLplus D40-120 F		Pump Data	
Rated voltage	1 x 230 V ±10%	IP protection	44
Frequency	50/60 Hz	Insulation class	155 (F)
Power absorbed [**W**] (min/max)	32 / 540	Max. working pressure	1,0 MPa (10 bar)
Input current [**A**] (min/max)	0,2 / 2,4	Liquid temperature	-10°C (14°F) to +110 °C (230°F)
Specific **EEI ≤**	0,23	Sound pressure level	≤ 48 dB(A)

En-Rev_E

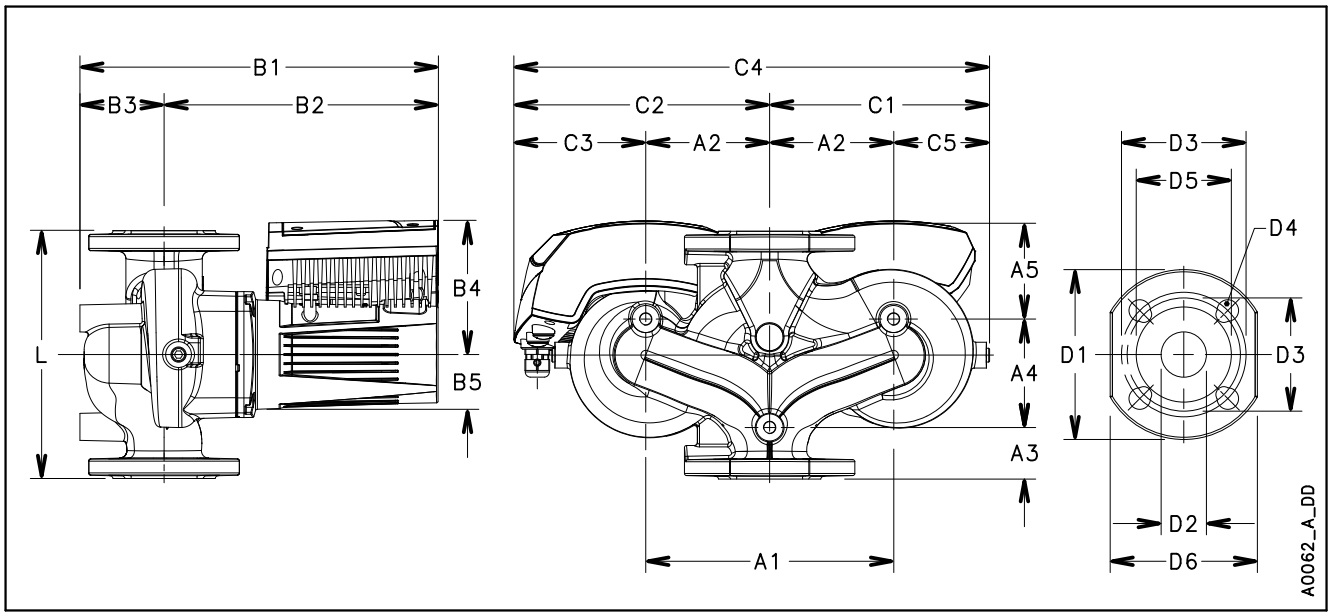

ecocirc XL-XLplus D40-120 F								Dimensions (mm)									Net weight 28,6 (Kg) - Gross weight 36,1 (Kg)				
L	**G**	**B1**	**B2**	**B3**	**B4**	**B5**	**C1**	**C2**	**C3**	**C4**	**C5**	**A1**	**A2**	**A3**	**A4**	**A5**	**D1**	**D2**	**D3**	**D4**	**D5**
250	DN 40	338	256	82	132	53	190	235,5	128	425,5	82,5	215	107,5	53	102	95	150	40	100/110	4 x 14/19	84

It-Rev_B

ecocirc XL-XLplus D40-150 F

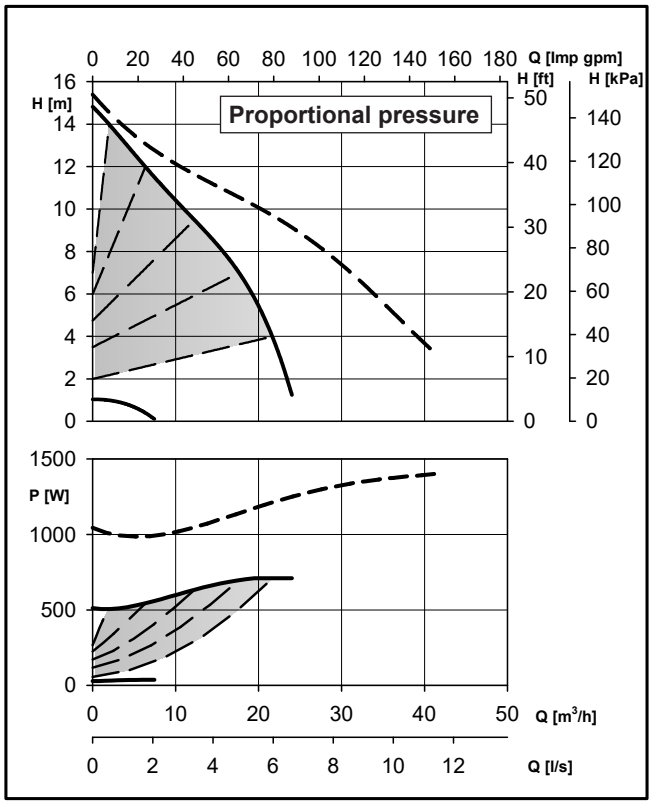

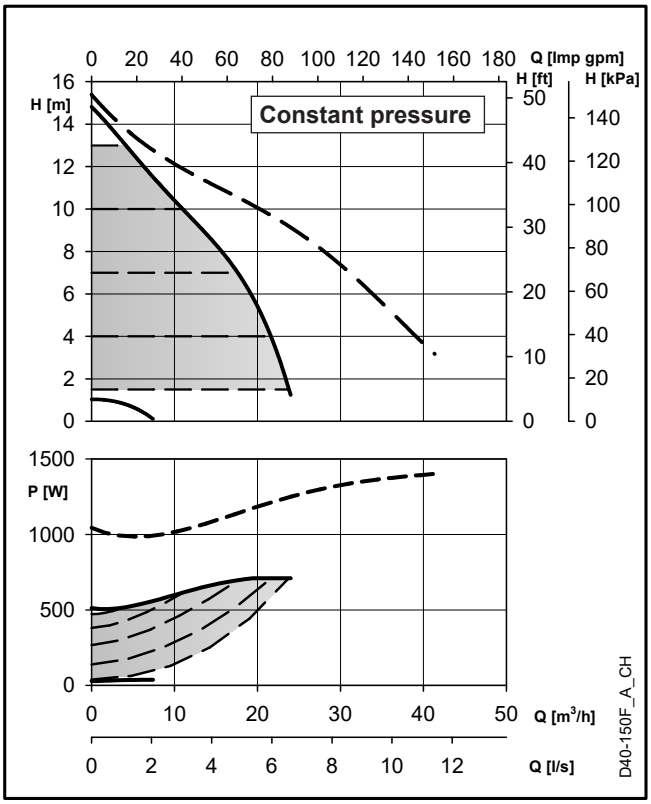

These performances are valid for liquids with density ρ = 1.0 Kg/dm³ and kinematic viscosity ν = 1 mm²/sec.

ecocirc XL-XLplus D40-150 F		Pump Data	
Rated voltage	1 x 230 V ±10%	IP protection	44
Frequency	50/60 Hz	Insulation class	155 (F)
Power absorbed [**W**] (min/max)	28 / 712	Max. working pressure	1,0 MPa (10 bar)
Input current [**A**] (min/max)	0,4 / 3,2	Liquid temperature	-10°C (14°F) to +110 °C (230°F)
Specific **EEI ≤**	0,23	Sound pressure level	≤ 52 dB(A)

En-Rev_A

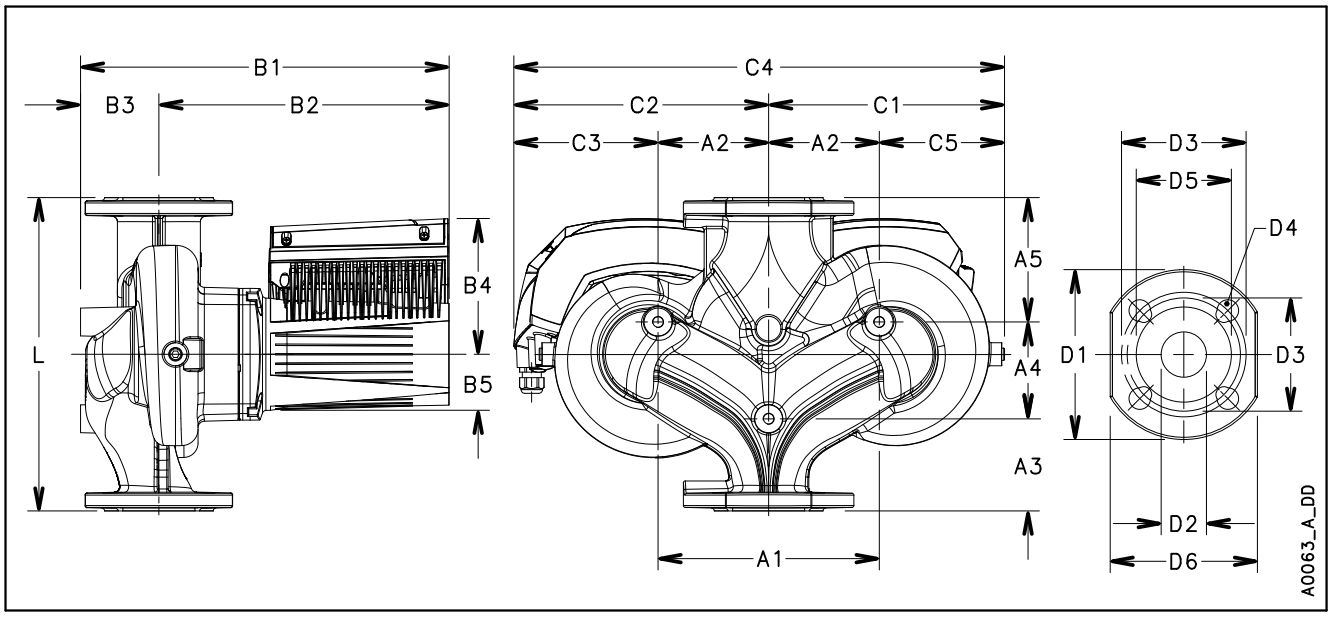

ecocirc XL-XLplus D40-150 F								Dimensions (mm)									Net weight 36,8 (Kg) - Gross weight 44,3 (Kg)				
L	**G**	**B1**	**B2**	**B3**	**B4**	**B5**	**C1**	**C2**	**C3**	**C4**	**C5**	**A1**	**A2**	**A3**	**A4**	**A5**	**D1**	**D2**	**D3**	**D4**	**D5**
250	DN 40	375,5	301	74,5	147	61	222	266	146	488	102	240	120	53	105	92	150	40	100/110	4 x 14/19	84

En-Rev_B

ecocirc XL-XLplus D40-180 F

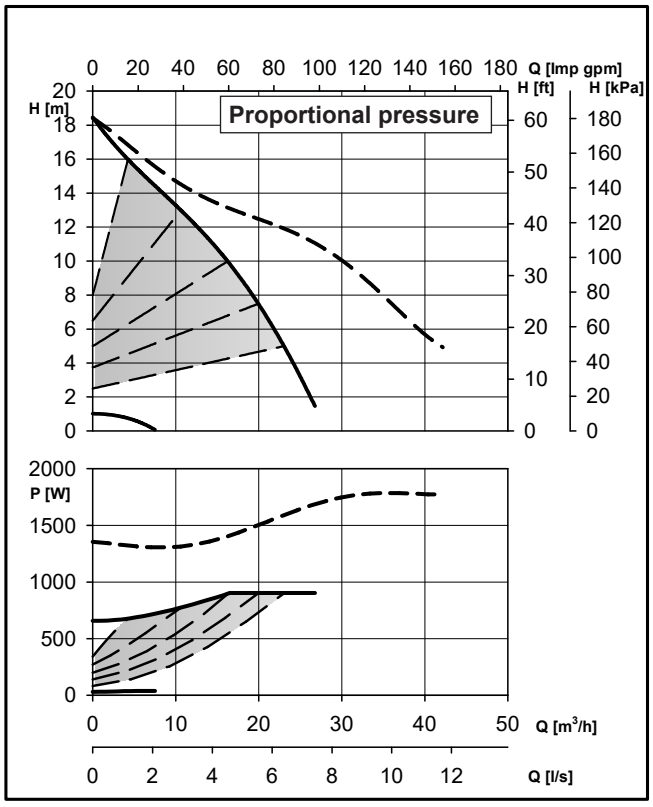

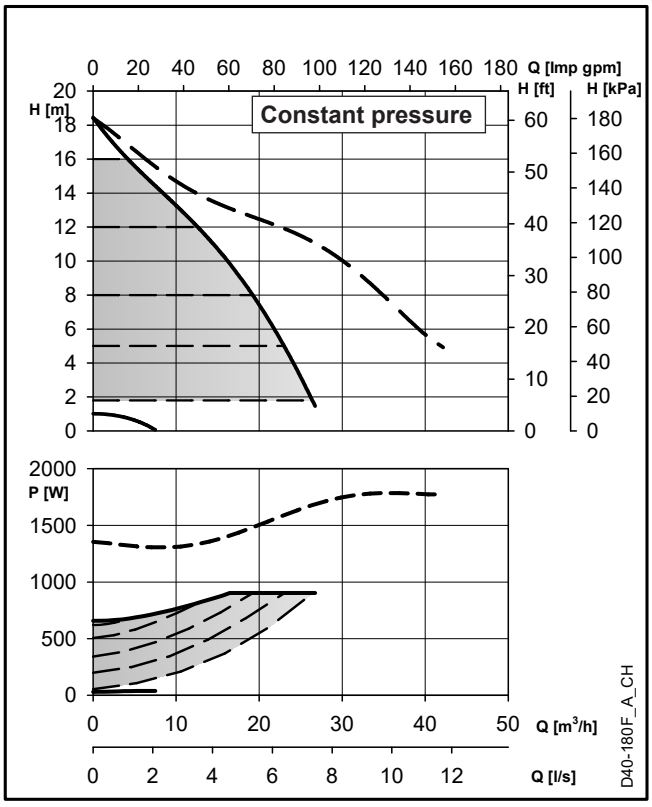

These performances are valid for liquids with density ρ = 1.0 Kg/dm³ and kinematic viscosity ν = 1 mm²/sec.

ecocirc XL-XLplus D40-180 F		Pump Data	
Rated voltage	1 x 230 V ±10%	IP protection	44
Frequency	50/60 Hz	Insulation class	155 (F)
Power absorbed [**W**] (min/max)	29 / 903	Max. working pressure	1,0 MPa (10 bar)
Input current [**A**] (min/max)	0,4 / 4,0	Liquid temperature	-10°C (14°F) to +110 °C (230°F)
Specific **EEI ≤**	0,23	Sound pressure level	≤ 52 dB(A)

En-Rev_A

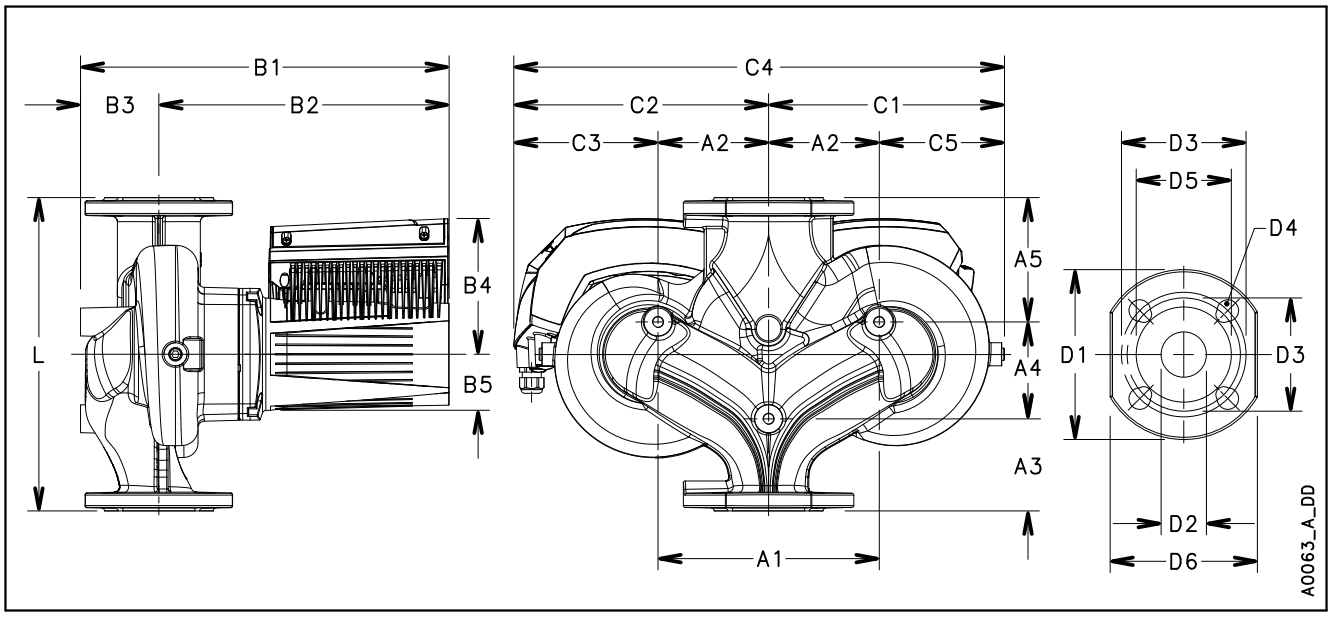

ecocirc XL-XLplus D40-180 F							Dimensions (mm)										Net weight 36,8 (Kg) - Gross weight 44,3 (Kg)				
L	**G**	**B1**	**B2**	**B3**	**B4**	**B5**	**C1**	**C2**	**C3**	**C4**	**C5**	**A1**	**A2**	**A3**	**A4**	**A5**	**D1**	**D2**	**D3**	**D4**	**D5**
250	DN 40	375,5	301	74,5	147	61	222	266	146	488	102	240	120	53	105	92	150	40	100/110	4 x 14/19	84

En-Rev_B

ecocirc XL-XLplus D50-80 F

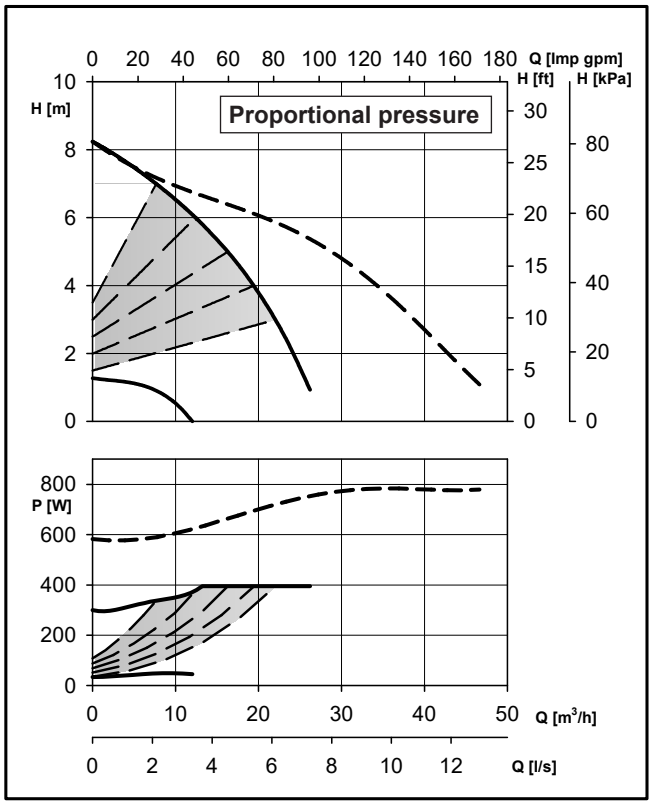

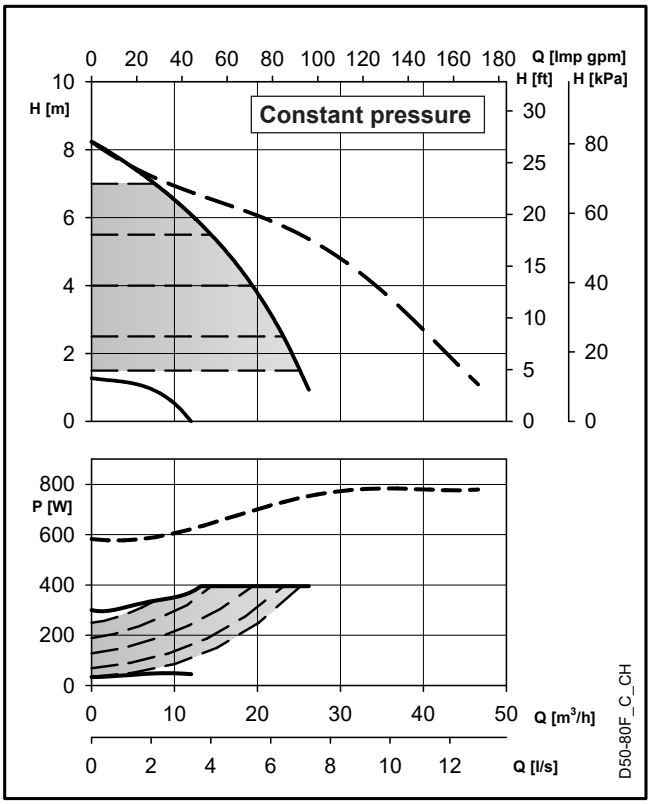

These performances are valid for liquids with density ρ = 1.0 Kg/dm³ and kinematic viscosity ν = 1 mm²/sec.

ecocirc XL-XLplus D50-80 F		Pump Data	
Rated voltage	1 x 230 V ±10%	IP protection	44
Frequency	50/60 Hz	Insulation class	155 (F)
Power absorbed [**W**] (min/max)	34 / 395	Max. working pressure	1,0 MPa (10 bar)
Input current [**A**] (min/max)	0,2 / 1,7	Liquid temperature	-10°C (14°F) to +110 °C (230°F)
Specific **EEI ≤**	0,23	Sound pressure level	≤ 48 dB(A)

En-Rev_D

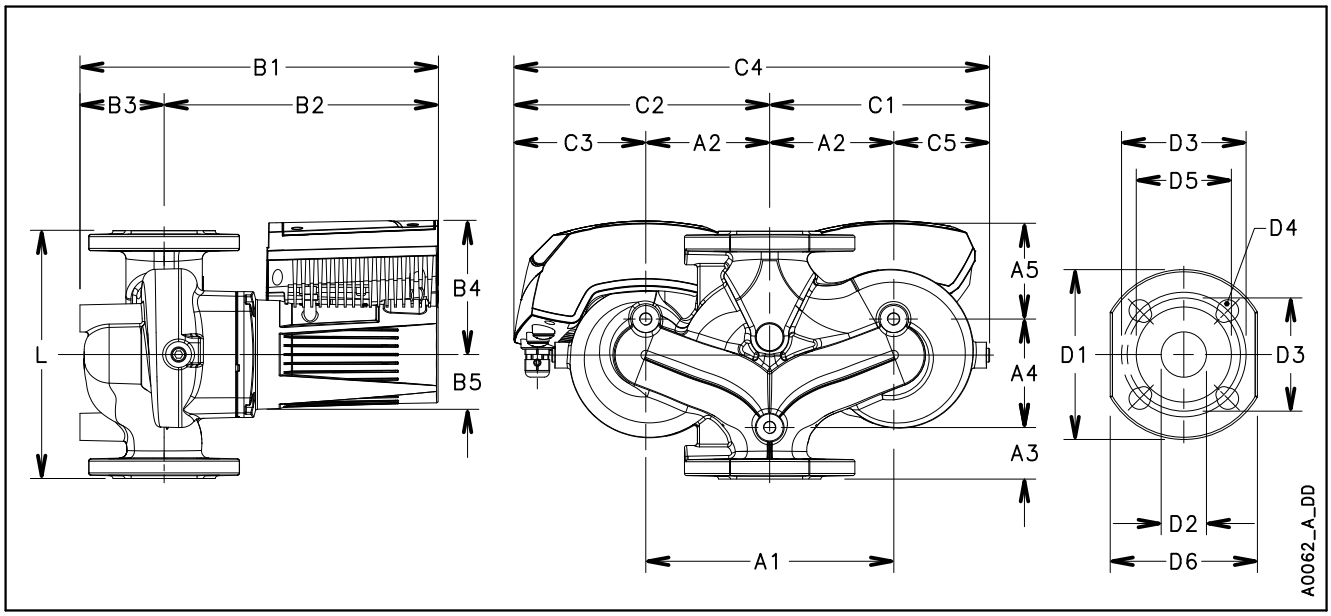

ecocirc XL-XLplus D50-80 F							Dimensions (mm)												Peso netto 33 (Kg) - Peso lordo 40,5 (Kg)		
L	**G**	**B1**	**B2**	**B3**	**B4**	**B5**	**C1**	**C2**	**C3**	**C4**	**C5**	**A1**	**A2**	**A3**	**A4**	**A5**	**D1**	**D2**	**D3**	**D4**	**D5**
240	DN 50	355	261	94	132	53	210	248	128	458	90	240	120	50	105	85	165	50	110/125	4 x 14/19	100

En-Rev_C

ecocirc XL-XLplus D50-120 F

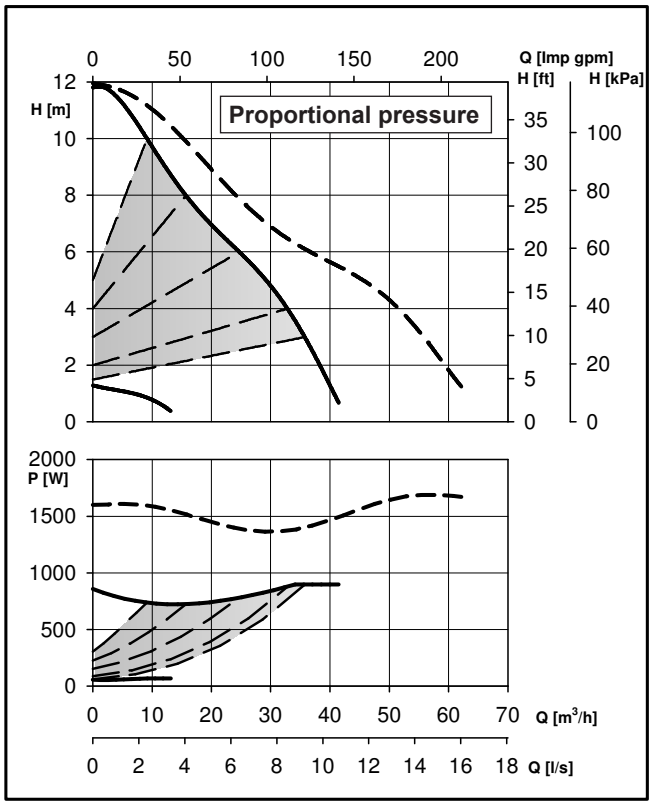

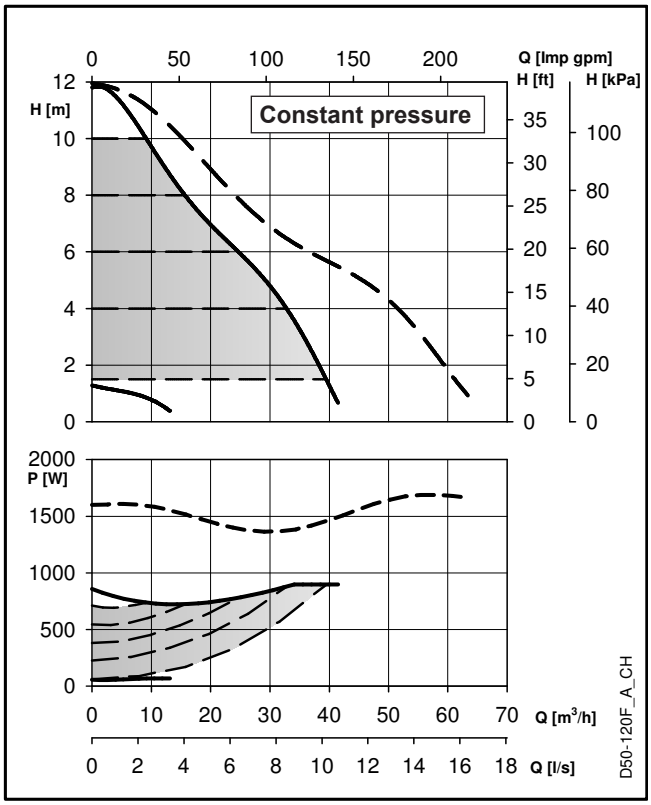

These performances are valid for liquids with density ρ = 1.0 Kg/dm³ and kinematic viscosity ν = 1 mm²/sec.

ecocirc XL-XLplus D50-120 F		Pump Data	
Rated voltage	1 x 230 V ±10%	IP protection	44
Frequency	50/60 Hz	Insulation class	155 (F)
Power absorbed [**W**] (min/max)	55 / 897	Max. working pressure	1,0 MPa (10 bar)
Input current [**A**] (min/max)	0,4 / 4,0	Liquid temperature	-10°C (14°F) to +110 °C (230°F)
Specific **EEI ≤**	0,23	Sound pressure level	≤ 52 dB(A)

En-Rev_C

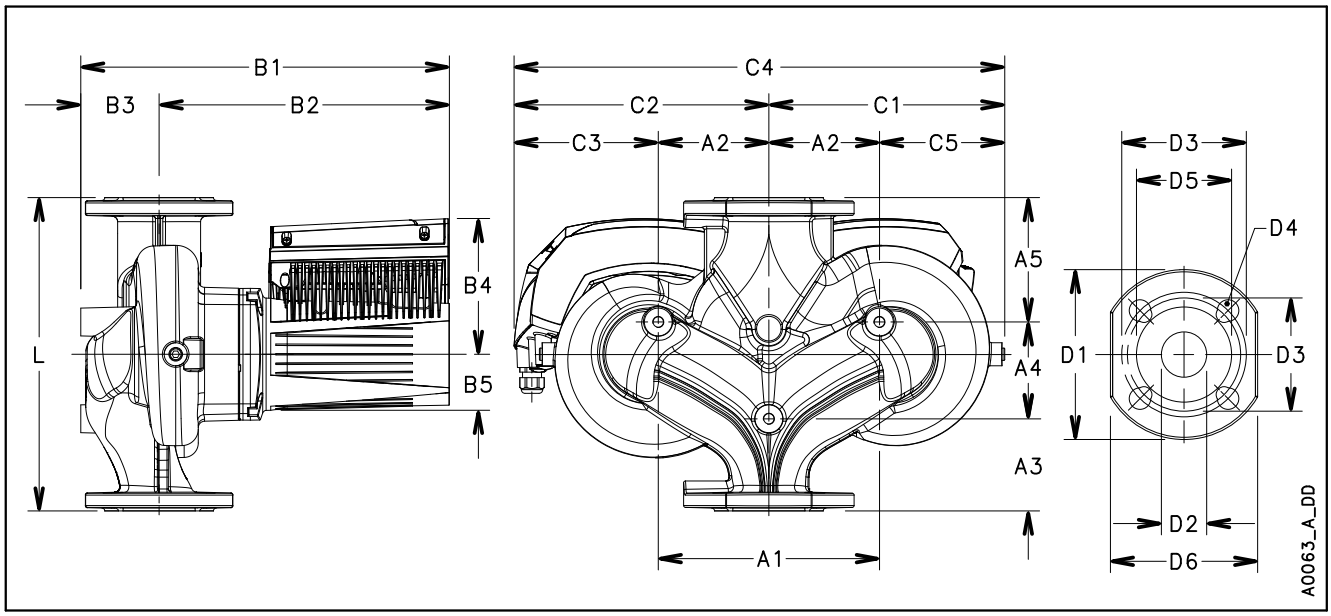

ecocirc XL-XLplus D50-120 F												Dimensions (mm)								**Net weight** 41,8 (Kg) **- Gross weight** 52,3 (Kg)	
L	**G**	**B1**	**B2**	**B3**	**B4**	**B5**	**C1**	**C2**	**C3**	**C4**	**C5**	**A1**	**A2**	**A3**	**A4**	**A5**	**D1**	**D2**	**D3**	**D4**	**D5**
280	DN 50	368	290	78	147	60	228	268	148	496	108	240	120	60	125	95	165	50	110/125	4 x 14/19	100

En-Rev_B

ecocirc XL-XLplus D50-150 F

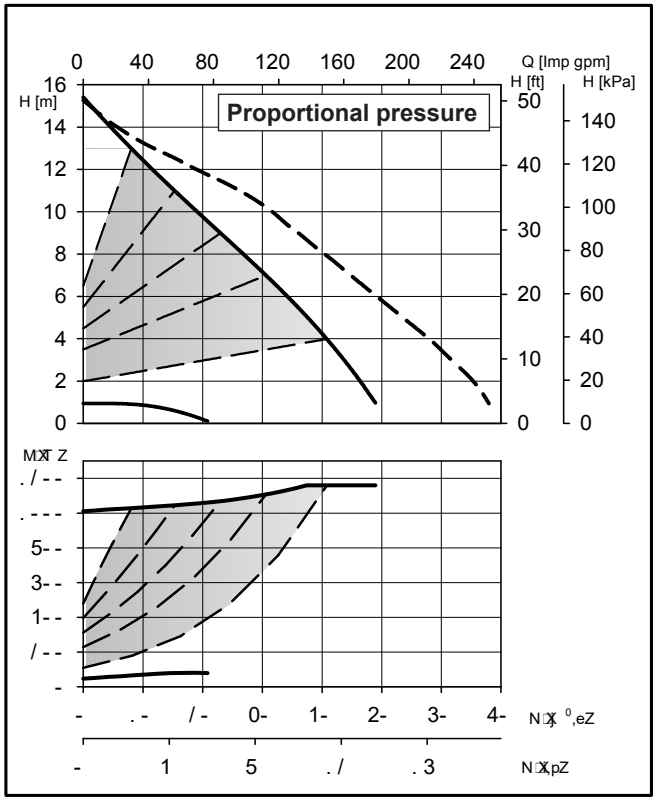

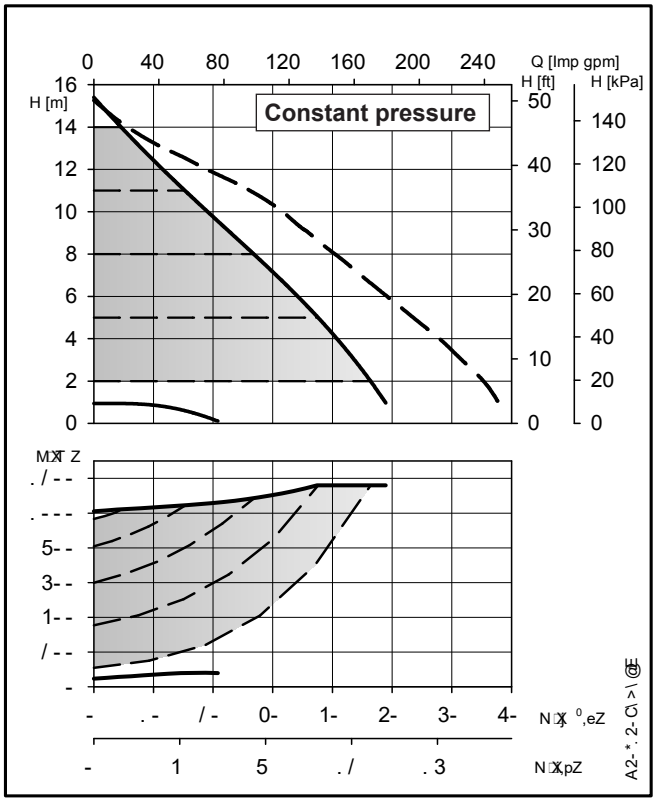

These performances are valid for liquids with density ρ = 1.0 Kg/dm³ and kinematic viscosity ν = 1 mm²/sec.

ecocirc XL-XLplus D50-150 F		Pump Data	
Rated voltage	1 x 230 V ±10%	IP protection	44
Frequency	50/60 Hz	Insulation class	155 (F)
Power absorbed [**W**] (min/max)	47 / 1160	Max. working pressure	1,0 MPa (10 bar)
Input current [**A**] (min/max)	0,4 / 5,1	Liquid temperature	-10°C (14°F) to +110 °C (230°F)
Specific **EEI ≤**	0,23	Sound pressure level	≤ 60 dB(A)

En-Rev_A

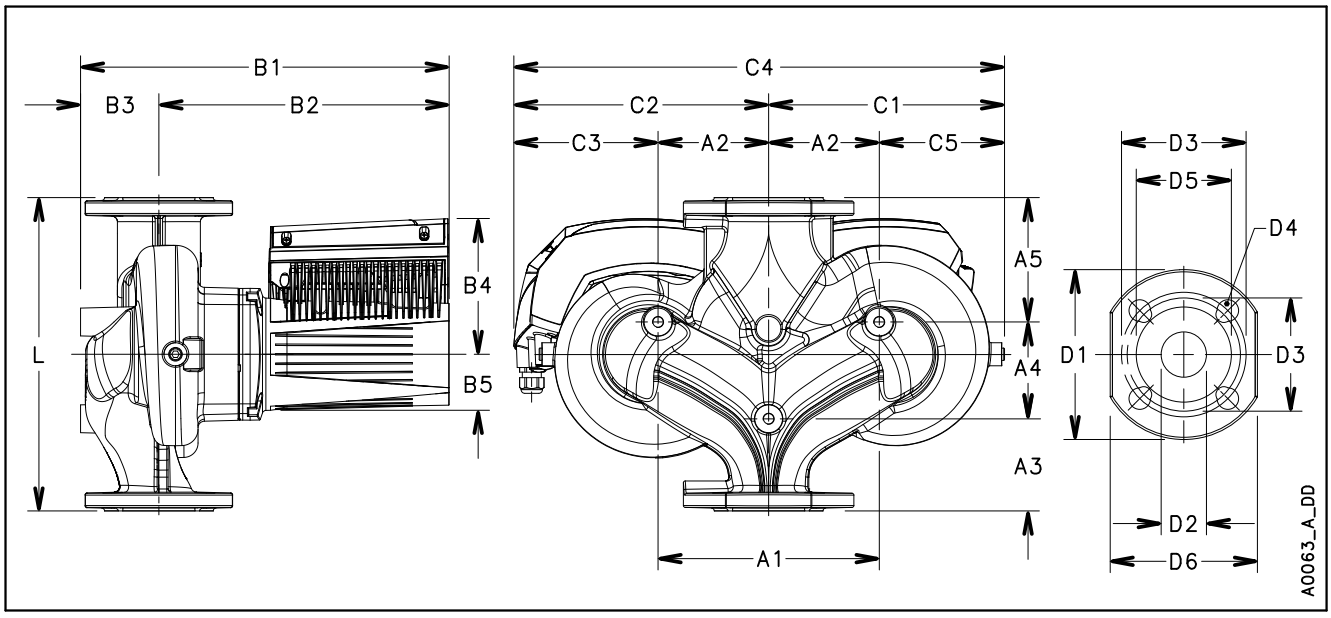

ecocirc XL-XLplus D50-150 F									Dimensions (mm)										Net weight 39,3 (Kg) - Gross weight 49,8 (Kg)		
L	**G**	**B1**	**B2**	**B3**	**B4**	**B5**	**C1**	**C2**	**C3**	**C4**	**C5**	**A1**	**A2**	**A3**	**A4**	**A5**	**D1**	**D2**	**D3**	**D4**	**D5**
280	DN 50	396,5	308	88,5	147	61	239	266	146	505	118	240	120	70	105	105	165	50	110/125	4x14/19	99

En-Rev_B

ecocirc XL-XLplus D50-180 F

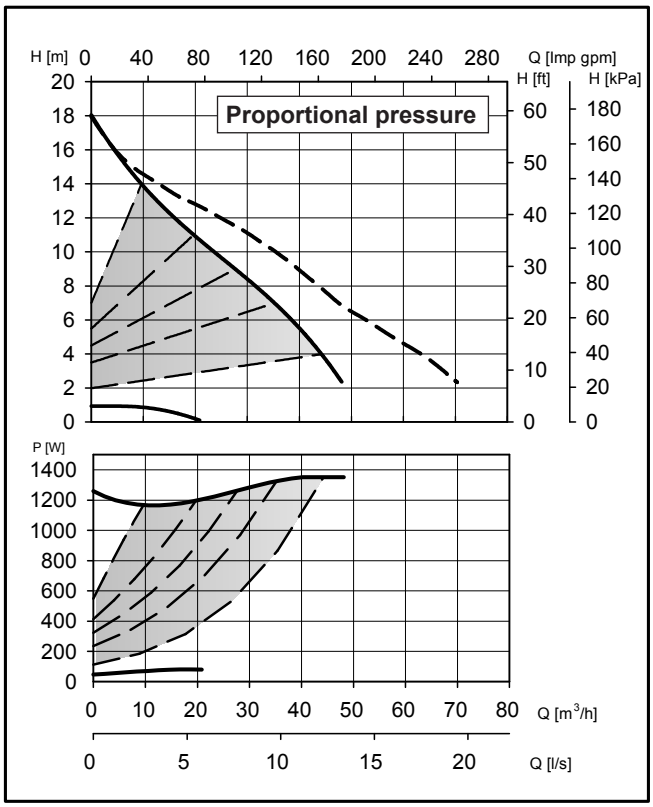

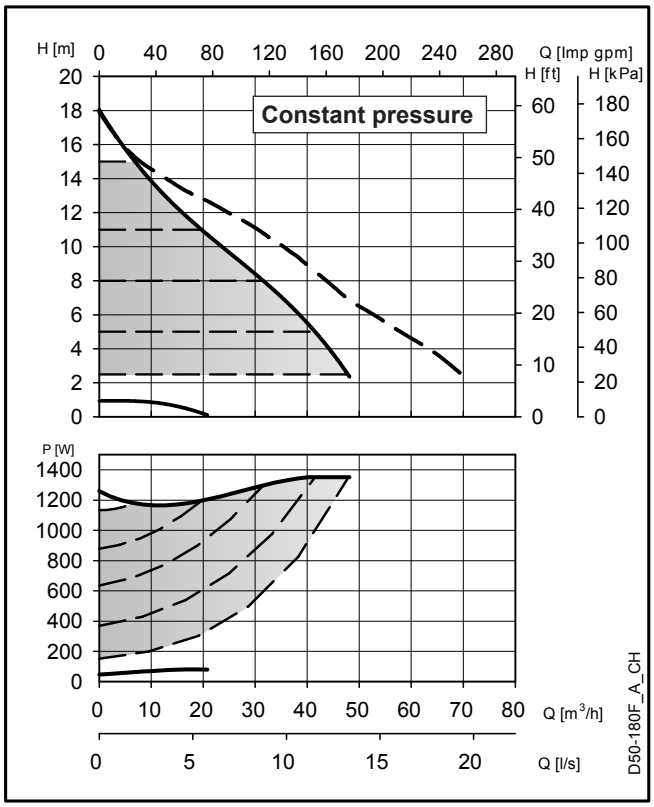

These performances are valid for liquids with density ρ = 1.0 Kg/dm³ and kinematic viscosity ν = 1 mm²/sec.

ecocirc XL-XLplus D50-180 F		Pump Data	
Rated voltage	1 x 230 V ±10%	IP protection	44
Frequency	50/60 Hz	Insulation class	155 (F)
Power absorbed [**W**] (min/max)	47 / 1350	Max. working pressure	1,0 MPa (10 bar)
Input current [**A**] (min/max)	0,4 / 5,9	Liquid temperature	-10°C (14°F) to +110 °C (230°F)
Specific **EEI ≤**	0,23	Sound pressure level	≤ 60 dB(A)

En-Rev_A

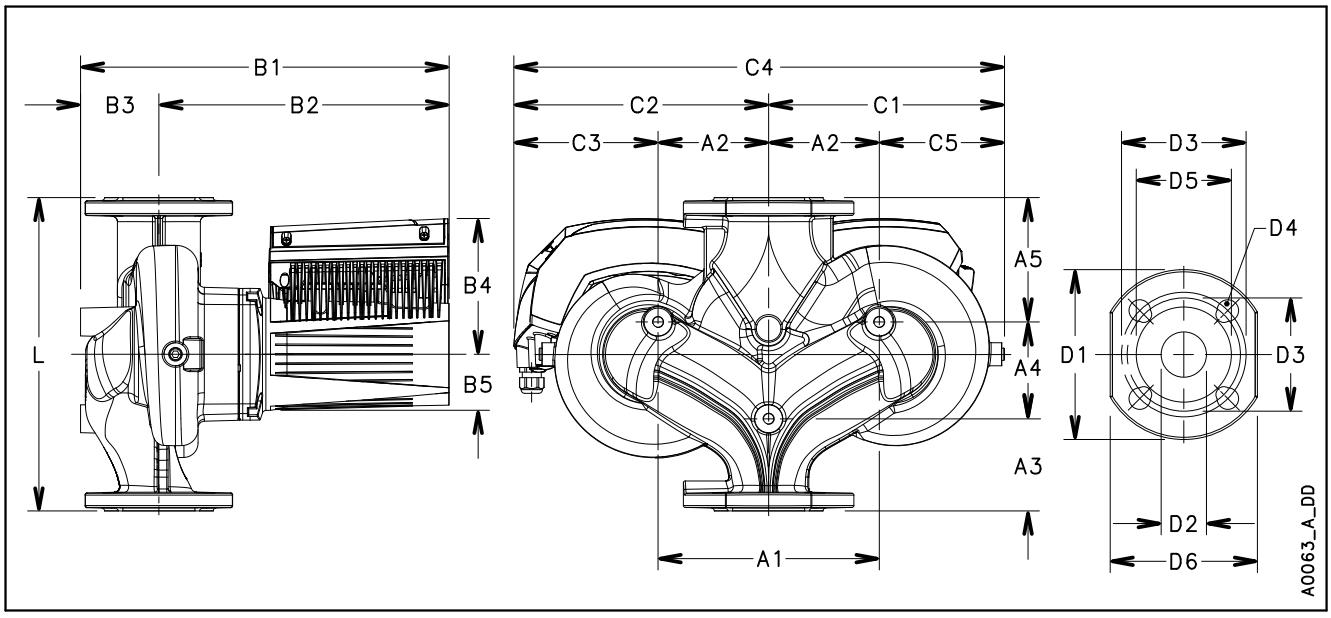

ecocirc XL-XLplus D50-180 F							Dimensions (mm)												Net weight 39,3 (Kg) - Gross weight 49,8 (Kg)		
L	**G**	**B1**	**B2**	**B3**	**B4**	**B5**	**C1**	**C2**	**C3**	**C4**	**C5**	**A1**	**A2**	**A3**	**A4**	**A5**	**D1**	**D2**	**D3**	**D4**	**D5**
280	DN 50	396,5	308	88,5	147	61	239	266	146	505	118	240	120	70	105	105	165	50	110/125	4x14/19	99

En-Rev_B

ecocirc XL-XLplus D65-80 F

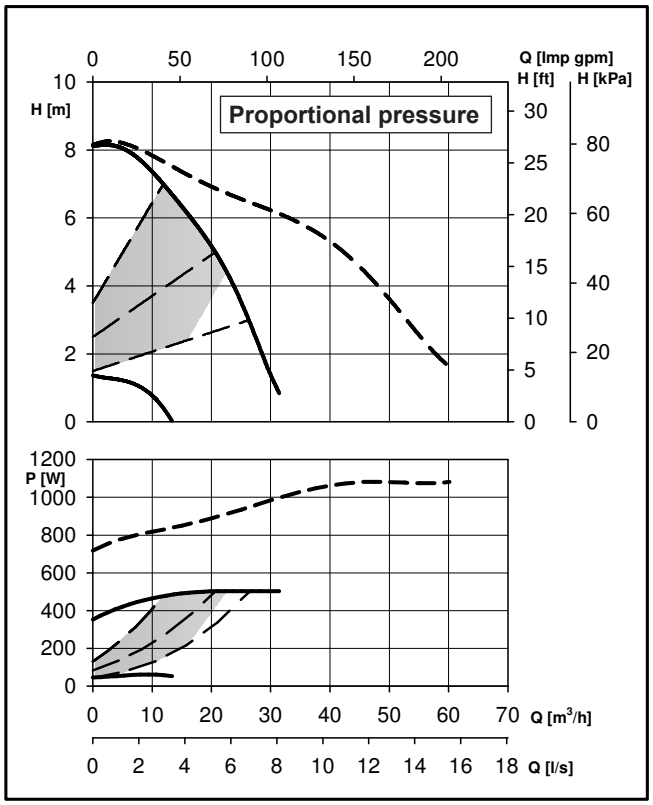

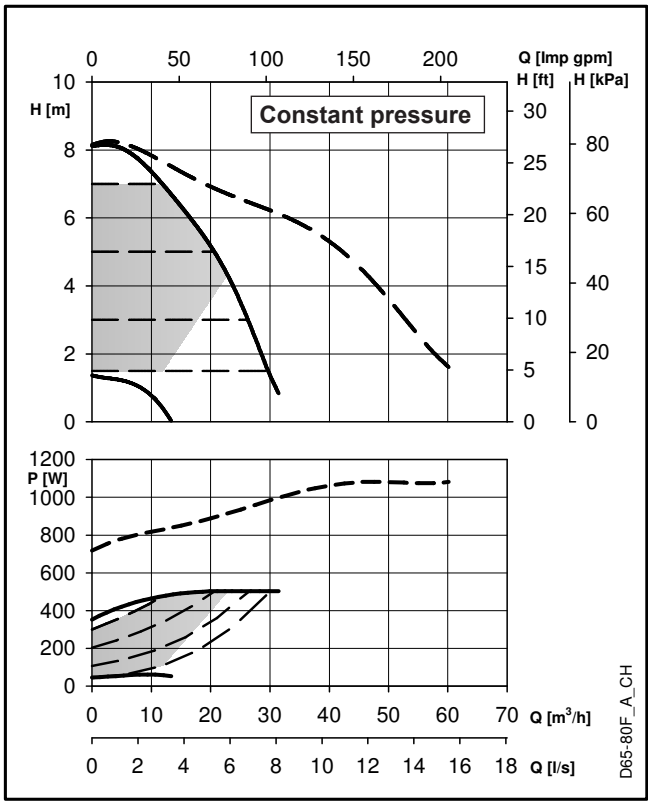

These performances are valid for liquids with density ρ = 1.0 Kg/dm³ and kinematic viscosity ν = 1 mm²/sec.

ecocirc XL-XLplus D65-80 F		Pump Data	
Rated voltage	1 x 230 V ±10%	IP protection	44
Frequency	50/60 Hz	Insulation class	155 (F)
Power absorbed [**W**] (min/max)	37 / 490	Max. working pressure	1,0 MPa (10 bar)
Input current [**A**] (min/max)	0,2 / 2,2	Liquid temperature	-10°C (14°F) to +110 °C (230°F)
Specific **EEI ≤**	0,23	Sound pressure level	≤ 48 dB(A)

En-Rev_D

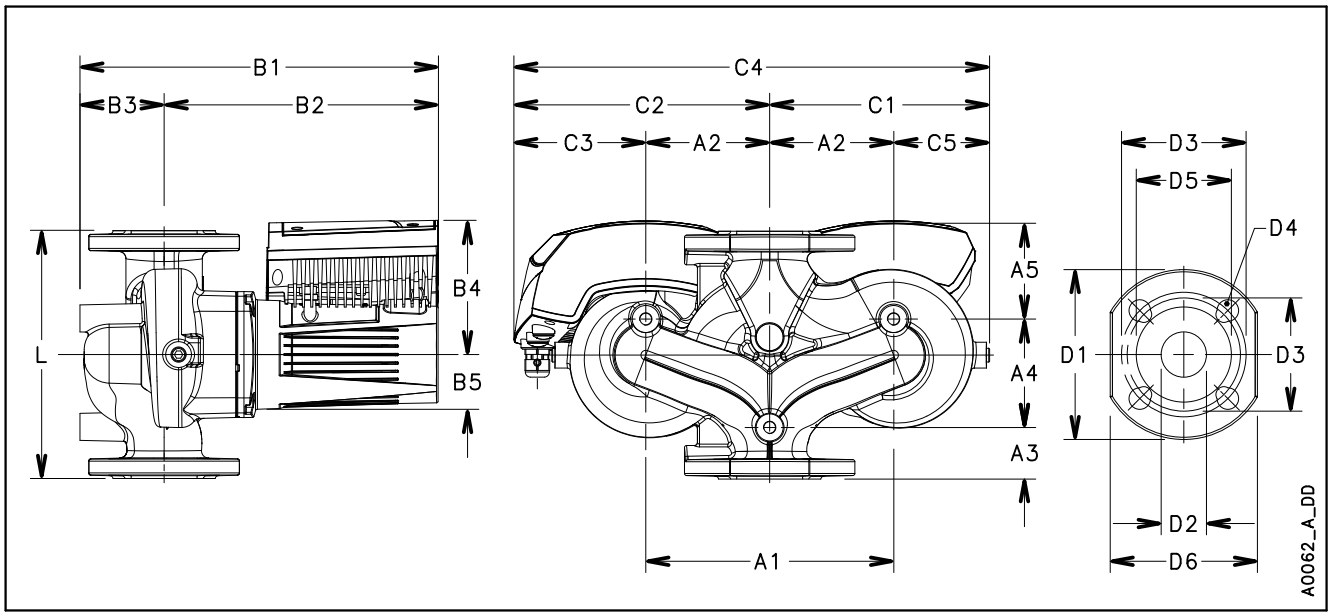

ecocirc XL-XLplus D65-80 F							Dimensions (mm)												Net weight 38,5 (Kg) - Gross weight 49 (Kg)		
L	**G**	**B1**	**B2**	**B3**	**B4**	**B5**	**C1**	**C2**	**C3**	**C4**	**C5**	**A1**	**A2**	**A3**	**A4**	**A5**	**D1**	**D2**	**D3**	**D4**	**D5**
340	DN 65	364	267	97	132	53	212,5	248	128	460,5	92,5	240	120	60	145	135	185	65	130/145	4 x 14/19	118

En-Rev_B

ecocirc XL-XLplus D65-120 F

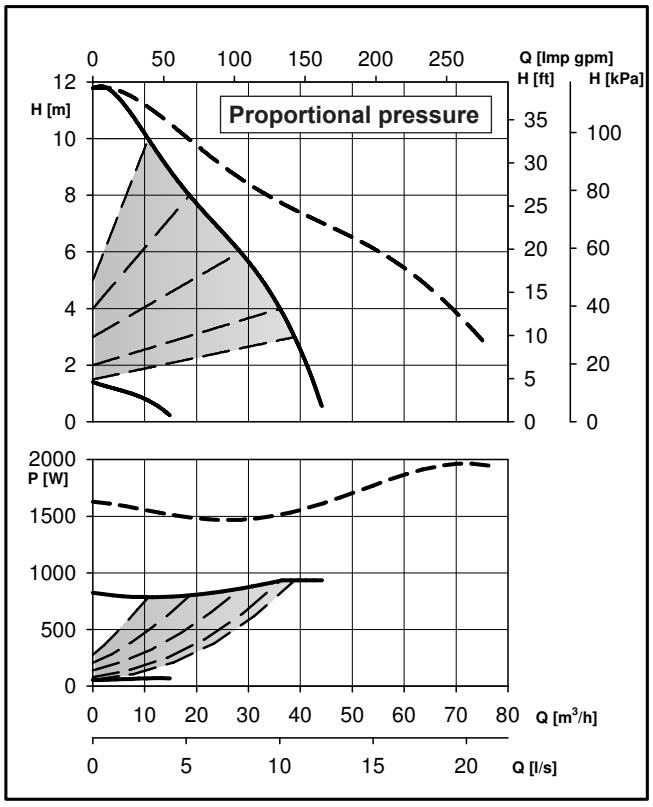

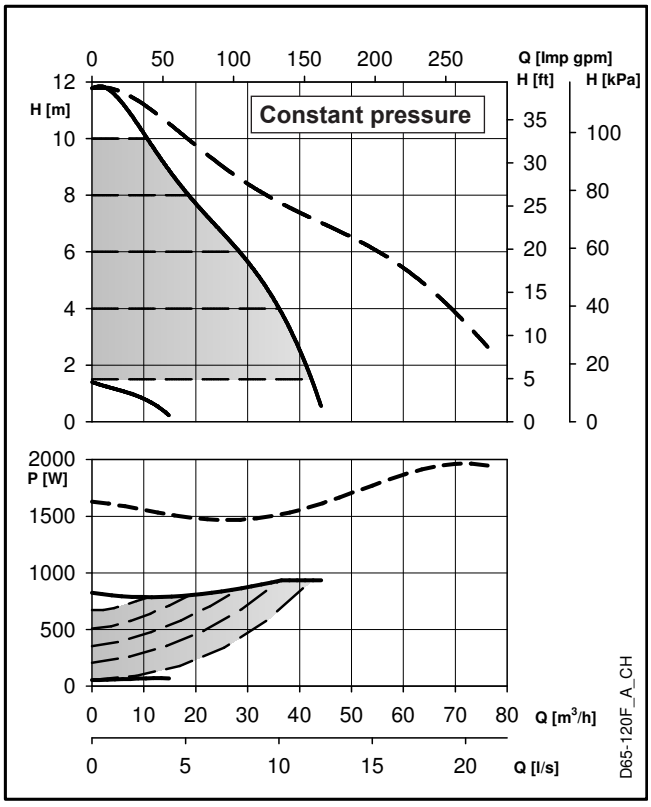

These performances are valid for liquids with density ρ = 1.0 Kg/dm³ and kinematic viscosity ν = 1 mm²/sec.

ecocirc XL-XLplus D65-120 F		Pump Data	
Rated voltage	1 x 230 V ±10%	IP protection	44
Frequency	50/60 Hz	Insulation class	155 (F)
Power absorbed [**W**] (min/max)	55 / 935	Max. working pressure	1,0 MPa (10 bar)
Input current [**A**] (min/max)	0,4 / 4,1	Liquid temperature	-10°C (14°F) to +110 °C (230°F)
Specific **EEI ≤**	0,23	Sound pressure level	≤ 52 dB(A)

En-Rev_C

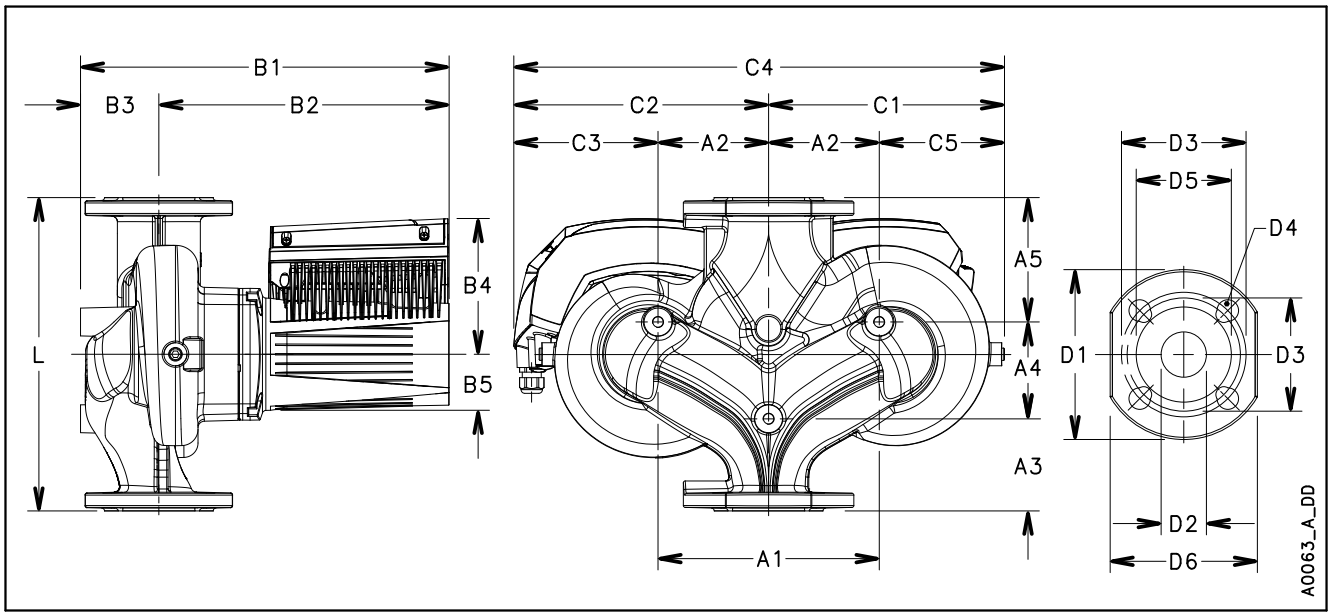

ecocirc XL-XLplus D65-120 F							Dimensions (mm)												**Net weight** 43,4 (Kg) **- Gross weight** 53,9 (Kg)		
L	**G**	**B1**	**B2**	**B3**	**B4**	**B5**	**C1**	**C2**	**C3**	**C4**	**C5**	**A1**	**A2**	**A3**	**A4**	**A5**	**D1**	**D2**	**D3**	**D4**	**D5**
340	DN 65	381	297	84	147	60	222	268	148	490	102	240	120	55	155	130	185	65	130/145	4 x 14/19	118

En-Rev_B

ecocirc XL-XLplus D65-150 F

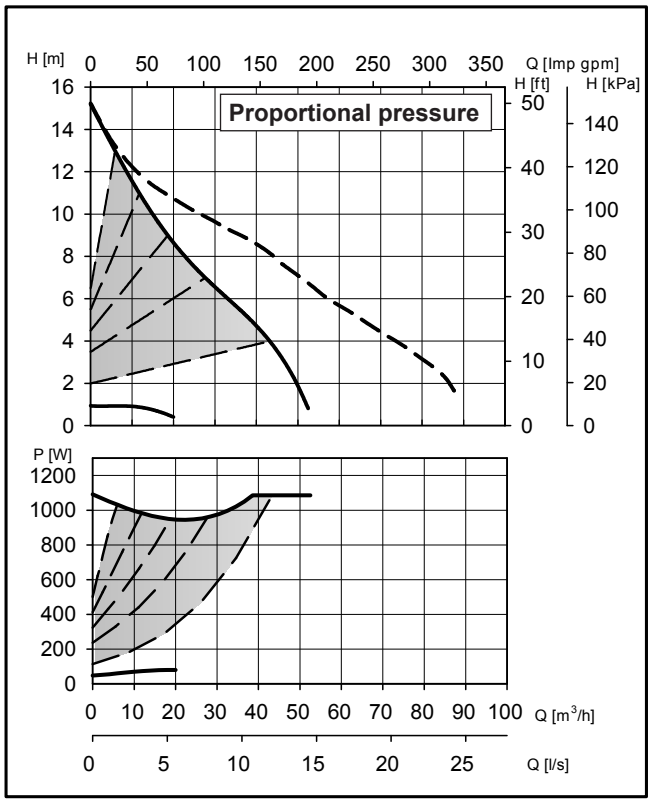

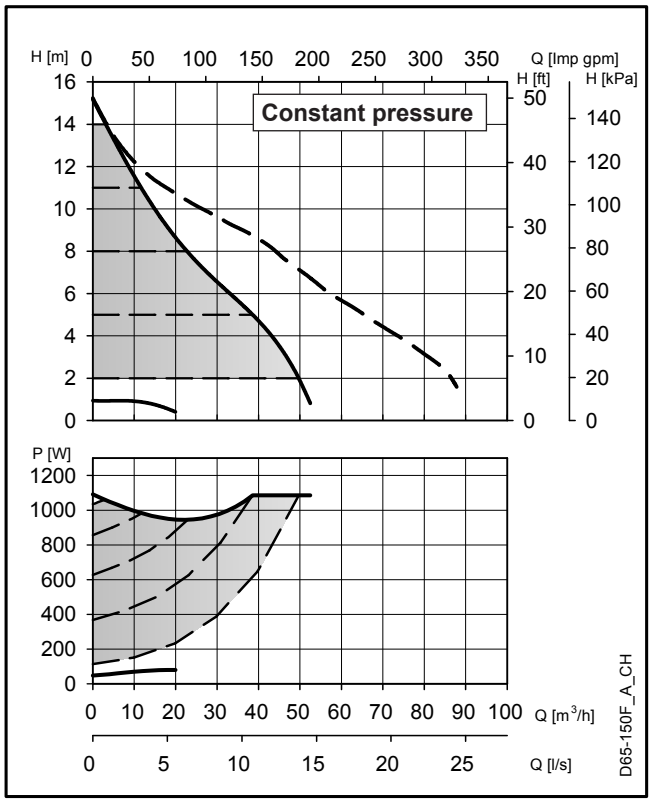

These performances are valid for liquids with density ρ = 1.0 Kg/dm³ and kinematic viscosity ν = 1 mm²/sec.

ecocirc XL-XLplus D65-150 F		Pump Data	
Rated voltage	1 x 230 V ±10%	IP protection	44
Frequency	50/60 Hz	Insulation class	155 (F)
Power absorbed [**W**] (min/max)	48 / 1090	Max. working pressure	0,6 MPa (6 bar) or 1,0 MPa (10 bar)
Input current [**A**] (min/max)	0,4 / 4,8	Liquid temperature	-10°C (14°F) to +110 °C (230°F)
Specific **EEI ≤**	0,23	Sound pressure level	≤ 60 dB(A)

En-Rev_A

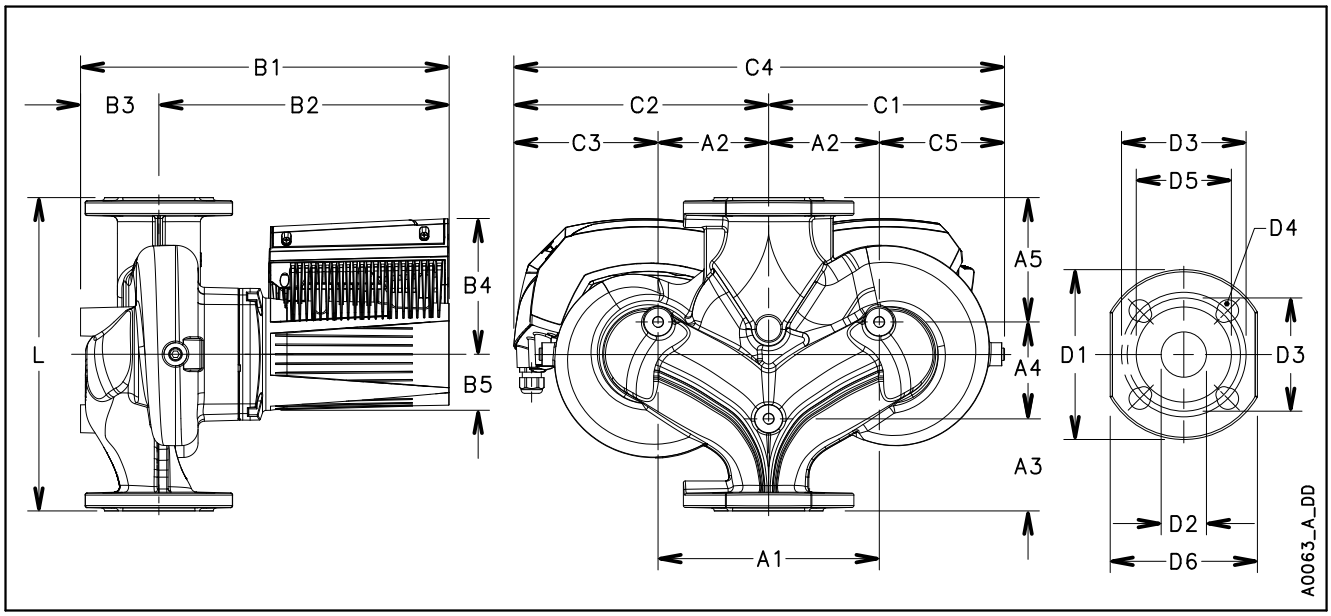

ecocirc XL-XLplus D65-150 F								Dimensions (mm)									Net weight 44,5 (Kg) - Gross weight 54,8 (Kg)				
L	**G**	**B1**	**B2**	**B3**	**B4**	**B5**	**C1**	**C2**	**C3**	**C4**	**C5**	**A1**	**A2**	**A3**	**A4**	**A5**	**D1**	**D2**	**D3**	**D4**	**D5**
340	DN 65	400	315	85	147	61	263	276	146	539	133	240	120	100	105	135	185	65	130/145	4x14/19	118

En-Rev_B

ecocirc XL-XLplus D65-180 F

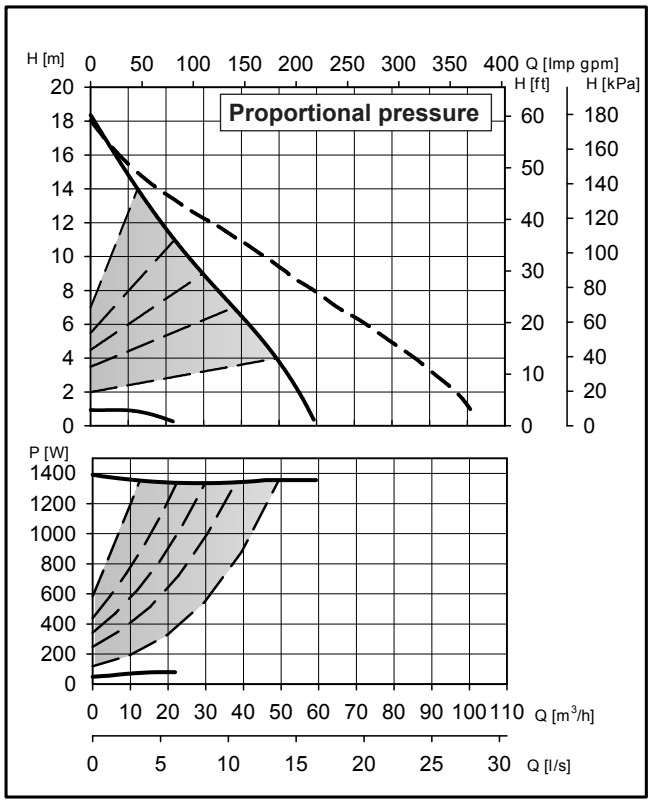

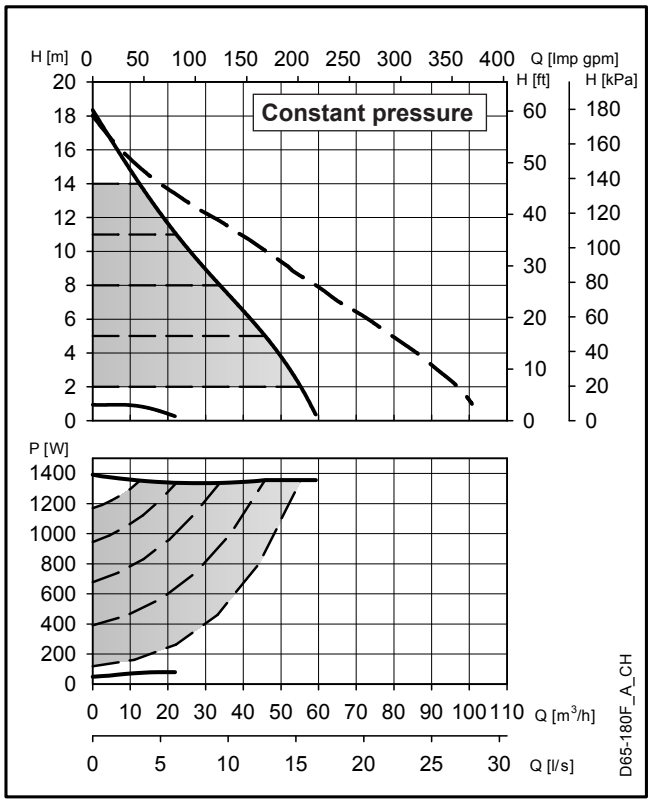

These performances are valid for liquids with density ρ = 1.0 Kg/dm³ and kinematic viscosity ν = 1 mm²/sec.

ecocirc XL-XLplus D65-180 F		Pump Data	
Rated voltage	1 x 230 V ±10%	IP protection	44
Frequency	50/60 Hz	Insulation class	155 (F)
Power absorbed [**W**] (min/max)	49 / 1400	Max. working pressure	1,0 MPa (10 bar)
Input current [**A**] (min/max)	0,4 / 6,2	Liquid temperature	-10°C (14°F) to +110 °C (230°F)
Specific **EEI ≤**	0,23	Sound pressure level	≤ 60 dB(A)

En-Rev_A

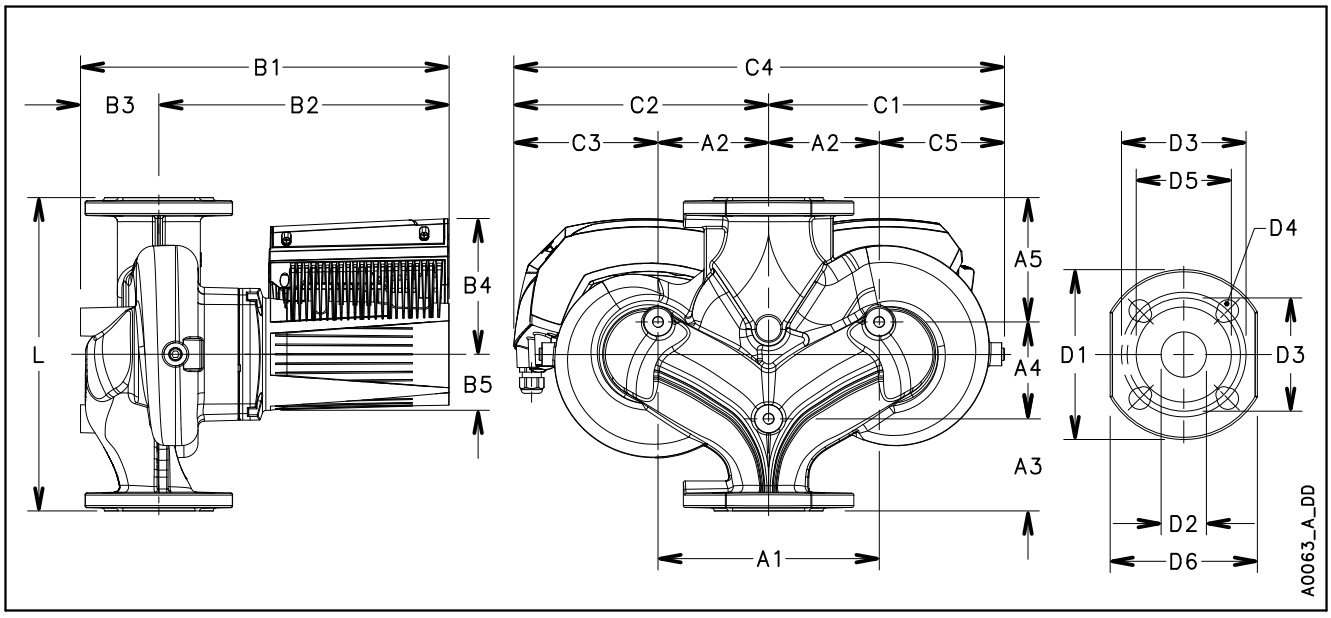

ecocirc XL-XLplus D65-180 F							Dimensions (mm)										Net weight 44,5 (Kg) - Gross weight 54,8 (Kg)				
L	**G**	**B1**	**B2**	**B3**	**B4**	**B5**	**C1**	**C2**	**C3**	**C4**	**C5**	**A1**	**A2**	**A3**	**A4**	**A5**	**D1**	**D2**	**D3**	**D4**	**D5**
340	DN 65	400	315	85	147	61	263	276	146	539	133	240	120	100	105	135	185	65	130/145	4x14/19	118

En-Rev_B

ecocirc XL-XLplus D80-120 F

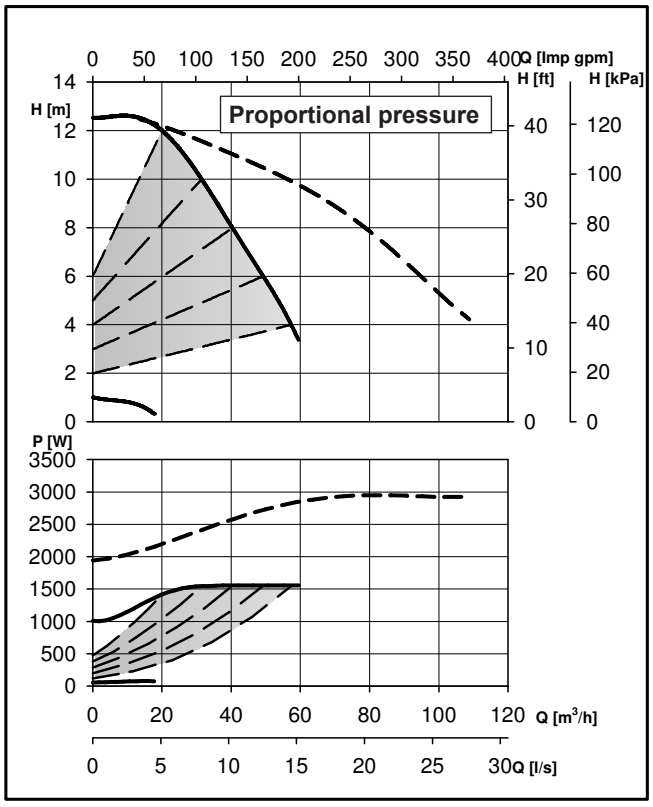

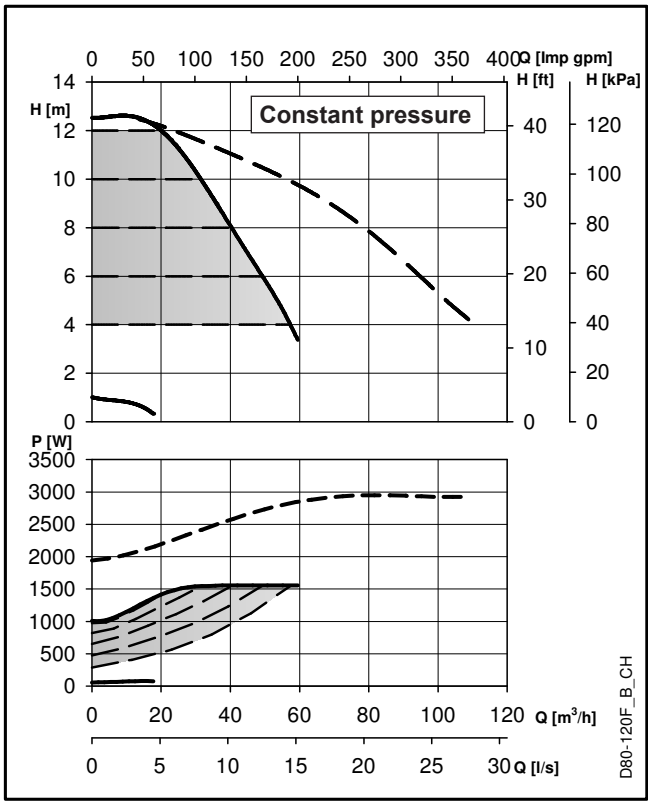

These performances are valid for liquids with density ρ = 1.0 Kg/dm³ and kinematic viscosity ν = 1 mm²/sec.

ecocirc XL-XLplus D80-120 F		Pump Data	
Rated voltage	1 x 230 V ±10%	IP protection	44
Frequency	50/60 Hz	Insulation class	155 (F)
Power absorbed [**W**] (min/max)	55 / 1560	Max. working pressure	0,6 MPa (6 bar) or 1,0 MPa (10 bar)
Input current [**A**] (min/max)	0,4 / 6,6	Liquid temperature	-10°C (14°F) to +110 °C (230°F)
Specific **EEI ≤**	0,23	Sound pressure level	≤ 55 dB(A)

En-Rev_B

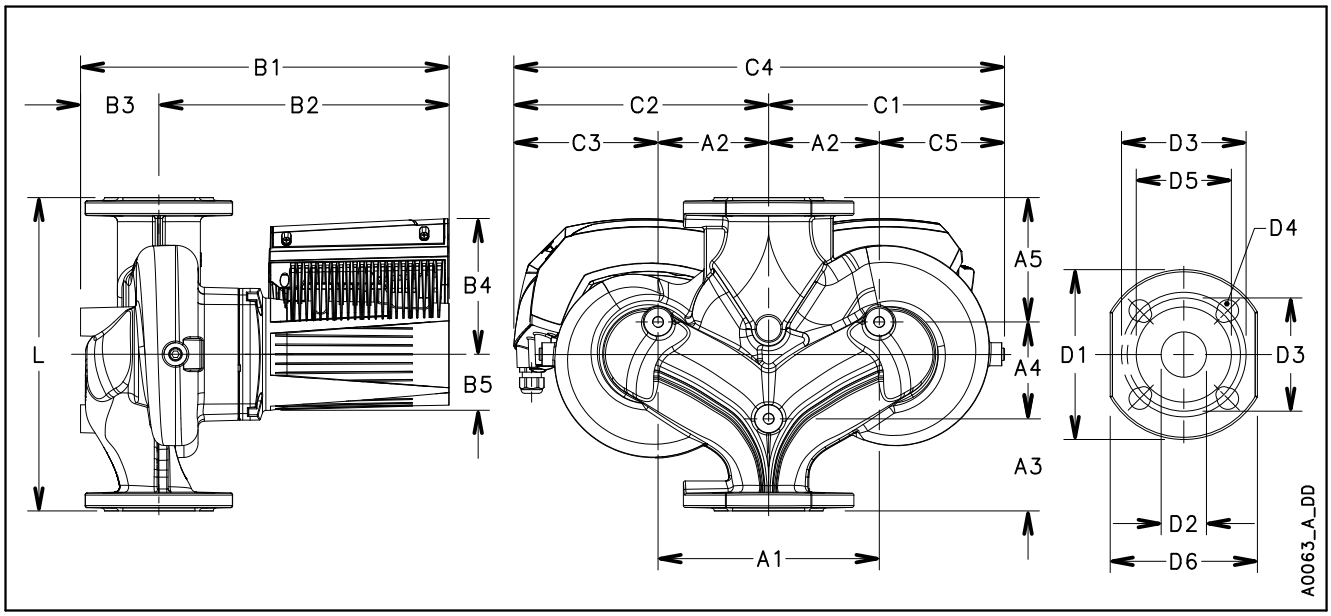

ecocirc XL-XLplus D80-120 F									Dimensioni (mm)								Net weight 51,3 (Kg) - Gross weight 61,8 (Kg)				
PN	**L**	**G**	**B1**	**B2**	**B3**	**B4**	**B5**	**C1**	**C2**	**C3**	**C4**	**C5**	**A1**	**A2**	**A3**	**A4**	**A5**	**D1**	**D2**	**D3**	**D4**	**D5**
6	360	DN 80	396	306	90	147	60	235	268	148	503	115	240	120	70	145	145	200	80	150	4 x 19	132
10	360	DN 80	396	306	90	147	60	235	268	148	503	115	240	120	70	145	145	200	80	160	8 x 19	132

En-Rev_C

ACCESSORIES

ecocirc XL-XLplus
THREADED COUNTERFLANGES KIT EN 1092-1

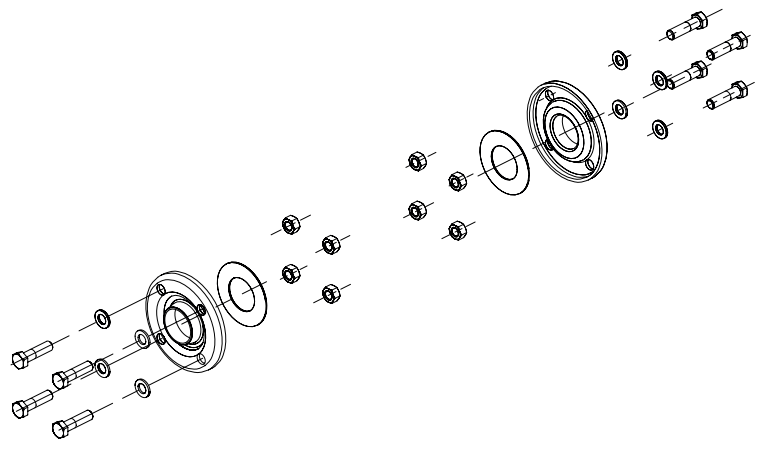

Kit containing 2 counterflanges with bolts and gaskets.
- threaded, galvanized steel.
- threaded, AISI 316 stainless steel.

C05928A_A_SC

PART NUMBER	DESCRIPTION	DN	PN (bar)	Ø C	Ø A (mm)	Ø D (mm)	Ø F (mm)	N°
109395700	Kit Rp 1" 1/4 PN6 galvanized steel	32	6	Rp 1 1/4	90	120	14	4
109395701	Kit Rp 1" 1/4 PN6 AISI 316							
109395710	Kit Rp 1" 1/2 PN6 galvanized steel	40	6	Rp 1 1/2	100	130	14	4
109395711	Kit Rp 1" 1/2 PN6 AISI 316							
109395720	Kit Rp 2" PN6 galvanized steel	50	6	Rp 2	110	140	14	4
109395721	Kit Rp 2" PN6 AISI 316							
109395730	Kit Rp 2" 1/2 PN6 galvanized steel	65	6	Rp 2 1/2	130	160	14	4
109395731	Kit Rp 2" 1/2 PN6 AISI 316							
109395740	Kit Rp 3" PN6 galvanized steel	80	6	Rp 3	150	190	18	4
109395741	Kit Rp 3" PN6 AISI 316							
109395750	Kit Rp 4" PN6 galvanized steel	100	6	Rp 4	170	210	18	4
109395751	Kit Rp 4" PN6 AISI 316							
109390631	Kit Rp 1” 1/4 PN10 galvanized steel	32	10	Rp 1 1/4	100	140	18	4
109390633	Kit Rp 1” 1/4 PN10 AISI 316							
109398020	Kit Rp 1” 1/2 PN10 galvanized steel	40	10	Rp 1 1/2	110	150	18	4
109398022	Kit Rp 1” 1/2 PN10 AISI 316							
109398030	Kit Rp 2” PN10 galvanized steel	50	10	Rp 2	125	165	18	4
109398032	Kit Rp 2” PN10 AISI 316							
109392710	Kit Rp 2” 1/2 PN10 galvanized steel	65	10	Rp 2 1/2	145	185	18	4
109392750	Kit Rp 2” 1/2 PN10 AISI 316							
109392720	Kit Rp 3” PN10 galvanized steel	80	10	Rp 3	160	200	18	8
109392760	Kit Rp 3” PN10 AISI 316							
109392730	Kit Rp 4” PN10 galvanized steel	100	10	Rp 4	180	220	18	8
109392770	Kit Rp 4” PN10 AISI 316							

En -Rev_A

ecocirc XL-XLplus
WELD-ON COUNTERFLANGES KIT EN 1092-1

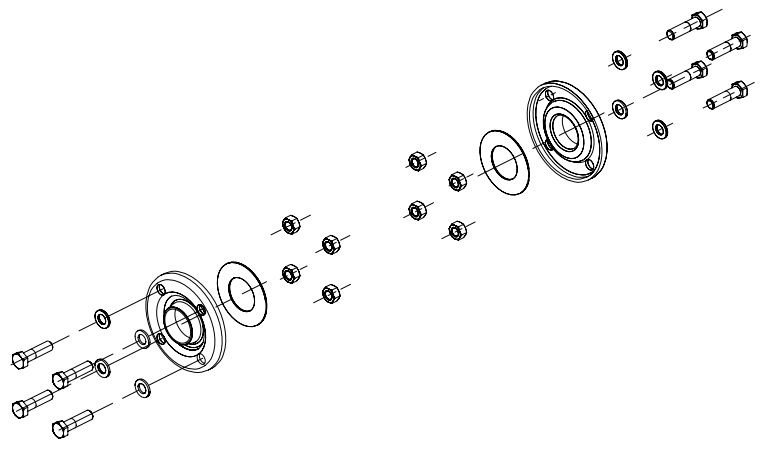

Kit containing 2 counterflanges with bolts and gaskets.
- weld-on counterflanges, carbon steel.
- weld-on counterflanges, AISI 316 stainless steel.

C05928B_A_SC

PART NUMBER	DESCRIPTION	DN	PN (bar)	Ø C (mm)	Ø A (mm)	Ø D (mm)	Ø F (mm)	N°
109395772	Kit DN32 PN6 carbon steel	32	6	43	90	120	14	4
109395775	Kit DN32 PN6 AISI 316							
109395782	Kit DN40 PN6 carbon steel	40	6	48	100	130	14	4
109395785	Kit DN40 PN6 AISI 316							
109395792	Kit DN50 PN6 carbon steel	50	6	60	110	140	14	4
109395795	Kit DN50 PN6 AISI 316							
109395802	Kit DN65 PN6 carbon steel	65	6	76	130	160	14	4
109395805	Kit DN65 PN6 AISI 316							
109395812	Kit DN80 PN6 carbon steel	80	6	89	150	190	18	4
109395815	Kit DN80 PN6 AISI 316							
109395822	Kit DN100 PN6 carbon steel	100	6	108	170	210	18	4
109395825	Kit DN100 PN6 AISI 316							
109395832	Kit DN32 PN10 carbon steel	32	10	43	100	140	18	4
109395835	Kit DN32 PN10 AISI 316							
109390662	Kit DN40 PN10 carbon steel	40	10	48	110	150	18	4
109390665	Kit DN40 PN10 AISI 316							
109390692	Kit DN50 PN10 carbon steel	50	10	60	125	165	18	4
109390695	Kit DN50 PN10 AISI 316							
109390732	Kit DN65 PN10 carbon steel	65	10	76	145	185	18	4
109392880	Kit DN65 PN10 AISI 316							
109390762	Kit DN80 PN10 carbon steel	80	10	89	160	200	18	8
109392890	Kit DN80 PN10 AISI 316							
109390772	Kit DN100 PN10 carbon steel	100	10	108	180	220	18	8
109392900	Kit DN100 PN10 AISI 316							

En-Rev_C

ecocirc XL-XLplus
SCREWED CONNECTIONS

MODEL	PART NUMBER	MATERIAL	G	Rp
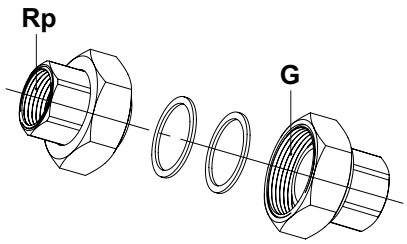	105890200	Galvanized steel	1" 1/2	1"
	105890220	Galvanized steel	2"	1" 1/4
	105890201	Brass	1" 1/2	1"
	105890221	Brass	2”	1” 1/4
	Kit containing 2 threaded connections and 2 gaskets.			

En-Rev_A

BLIND FLANGES

MODEL	PART NUMBER	CIRCULATOR TYPE
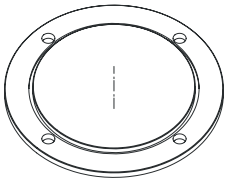	109395550	D32-80 / D32-100 / D32-80 F / D32-100 F D40-80.11 F / D40-80 F / D40-100.12 F / D40-100 F
	109395560	D32-120 F / D40-120 F / D50-80 F / D65-80 F
	109395570	D40-150 F / D40-180 F / D50-120 F / D65-120 F / D80-120 F
	Kit containing 1 blind flange painted steel, 1 OR and 4 screws.	

En-Rev_B

ADAPTERS*

MODEL	PART NUMBER	DN	PN (bar)	A (mm)	B (mm)	L** (mm)
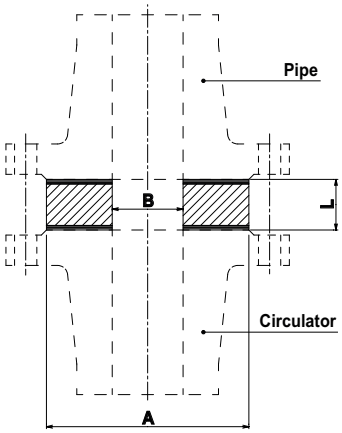						
	109395850	40	10	88	45	30
	109395860	50	10	102	55	40
	109395870	65	10	122	70	60
	Kit containing 1 steel adapter, 2 gaskets and 4 bolts (with nuts and washers) for the appropriate lenght. ** L dimension including 2 gaskets.					

En-Rev_A

* Dedicated to circulators with cast iron pump housing only.

ecocirc XL-XLplus
BRACKETS KIT

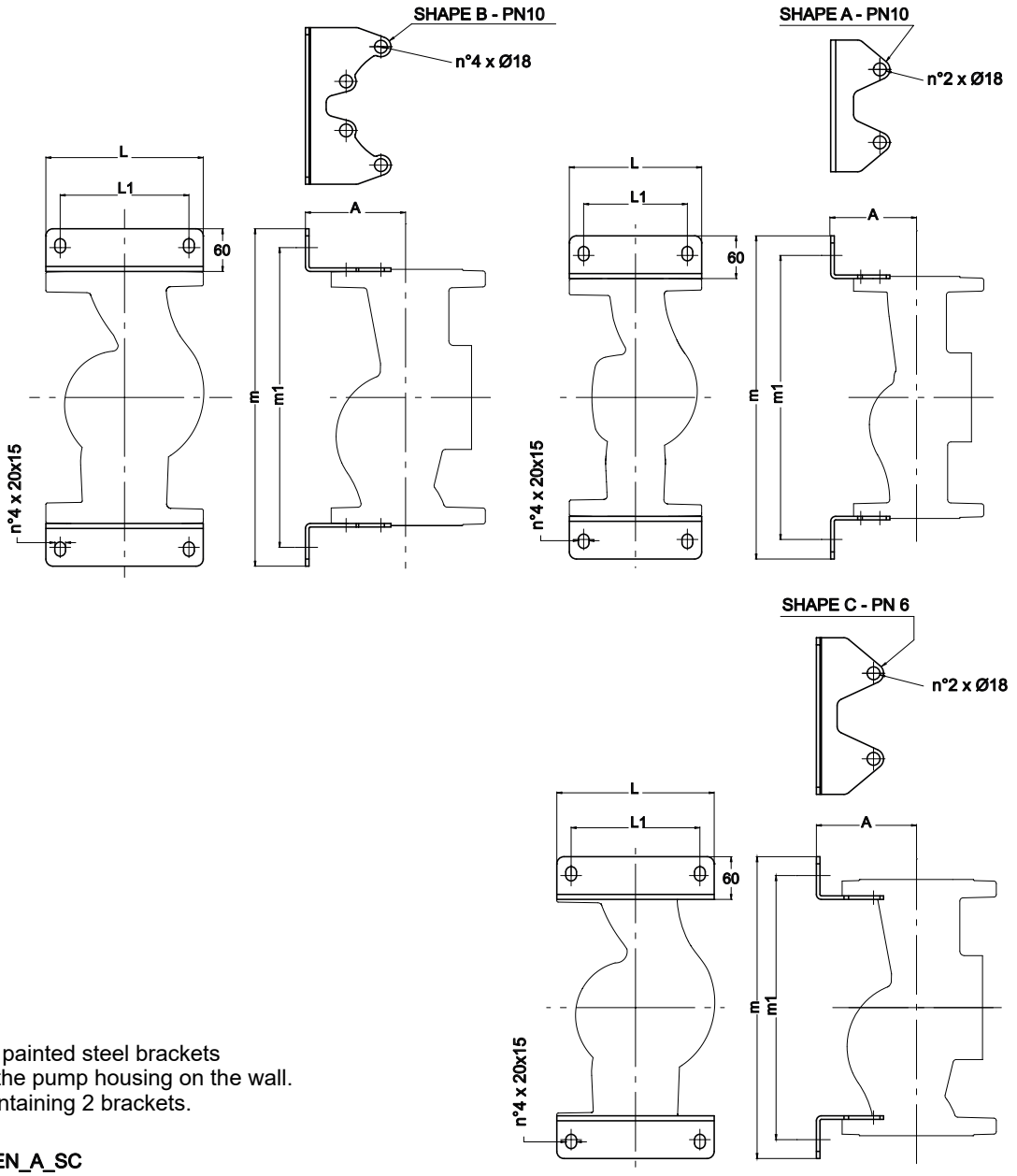

Black painted steel brackets
to fix the pump housing on the wall.
Kit containing 2 brackets.

A0007-EN_A_SC

PART NUMBER	CIRCULATOR TYPE	PN (bar)	SHAPE	DIMENSIONS (mm)				
				A	m	m1	L	L1
109395590	32-80 F / 32-100 F / 32-120 F (N)	6/10	A	100	334	284	150	110
	D32-80 F / D32-100 F / D32-120 F	6/10						
109395600	40-80.11 F / 40-80 F / 40-100.12 F / 40-100 F / D40-80.11 F / D40-80 F / D40-100.12 F / D40-100 F	6/10	A	100	334	284	150	110
	40-120 F (N) / 40-150 F / 40-180 F / D40-120 F / D40-150 F / D40-180 F	6/10	A	100	364	314	150	110
109395610	50-80 F (N) / D50-80 F	6/10	A	110	354	304	165	125
	50-100 F / 50-120 F (N) / 50-150 F / 50-180 F / D50-120 F / D50-150 F / D50-180 F	6/10	A	110	394	344	165	125
109395620	65-80 F (N) / 65-120 F (N) / 65-150 F / 65-180 F	6/10	A	120	454	404	185	145
	D65-80 F / D65-120 F / D65-150 F / D65-180 F	6/10	A	120	454	404	185	145
109395630	80-120 F / D 80-120 F	10	B	130	474	426	200	160
109395640	80-120 F / D 80-120 F	6	C	130	424	376	200	160
109395650	100-120 F	10	B	140	474	426	220	180
109395660	100-120 F	6	C	140	424	376	220	180

staffe-ecocircXL-en_c_sc

ecocirc XLplus
DIFFERENTIAL TEMPERATURE SENSOR

PART NUMBER	DESCRIPTION
002168552	Temperature sensor KTY 82/110

En-Rev_B

The external temperature sensor (1kΩ at 25°C), connected to terminals 13 (T+) and 14 (T-) has the purpose of measuring an absolute water temperature, or a differential water temperature if used together with the built-in sensor inside the circulator, in temperature dependent / influenced operating modes.

The functional mode based on the water temperature, detected by the internal probe and/or by the external temperature sensor, can be set by:

- Web pages via wireless communication (wireless module is required);
- “ecocircXL Control Center” software, installed in any PC connected to the circulator through the USB-RS485 cable.

Constant T

This control mode ensures a constant water temperature. Constant temperature is a comfort control mode that can be used in fixed charateristic systems (like domestic hot-watersystems). The basic assumption is that the circulator regulates the water temperature in a point on the return pipe of the system, as close as possible to the consumer (i.e. radiator). The pump has a built-in temperature sensor which can be used for regulating the speed of the pump; in case of pump installed in the flow pipe, or in the return pipe but far from the consumer, then it’s possible to detect the water temperature using the external temperature sensor.

Constant ΔT

This control mode keeps the differential temperature of the pumped liquid constant between two different points of the system, changing the flow rate. The internal probe and the external temperature sensor work together in order to detect the two temperatures.

ΔP/T

In this control mode the drive alters the differential pressure set-point the pump has to maintain, depending on the measured fluid temperature. This functional mode can be deployed in:

- Constant pressure depending on water temperature: in this control mode the pump alters the constant pressure set-point depending on the measured fluid temperature;
- Proportional pressure depending on water temperature: in this control mode the pump alters the proportional pressure set-point depending on the measured fluid temperature.

As in constant T functional mode, the temperature can be detected by the internal probe or adding the external temperature sensor.

For configuration and more information refer to the Operating and Instruction Manual and to the Electronic Drive Manual.

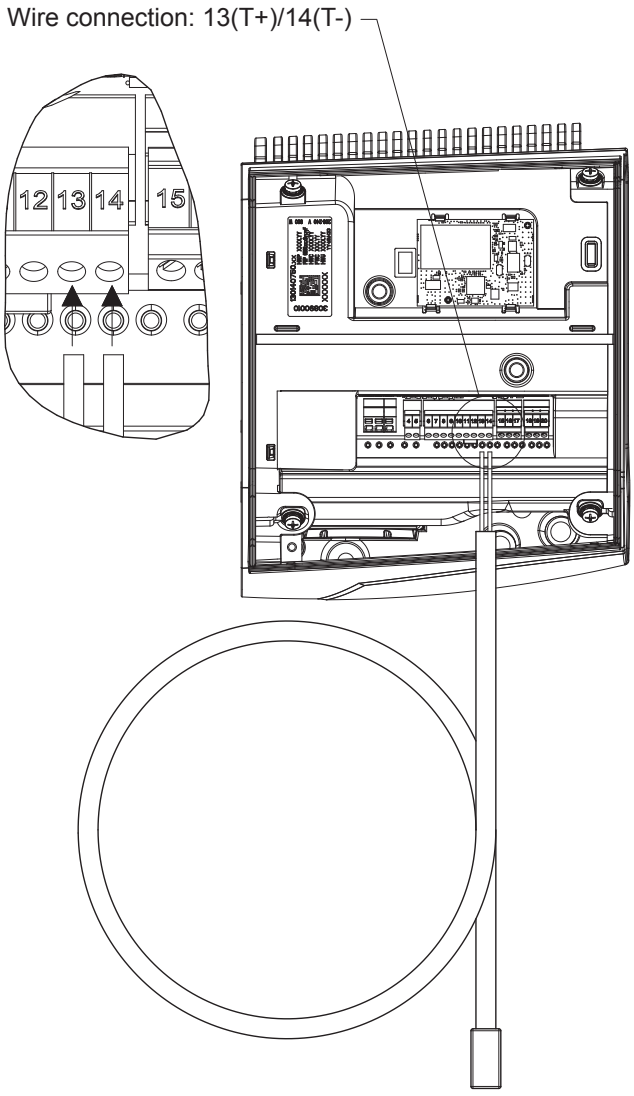

ecocirc XLplus
WIRELESS AND ADDITIONAL RS485 MODULE

PART NUMBER	DESCRIPTION
109395500	Wireless module
109395510	RS 485 module

En-Rev_A

The drive can be equipped with optional modules, which shall be fixed on the bottom side of the drive cover (models 25-40 (N), 25-60 (N), 32-40 (N), 32-60 (N) - fig 1) or in the appropriate slot inside the drive unit (all other models - fig 2).

Scope of delivery is the optional module, the flat cable for the connection to the drive and the Installation, Operation and Maintenance Manual.

For configuration more information refer to the Operating and Instruction Manual and to the Electronic Drive Manual.

Fig 1

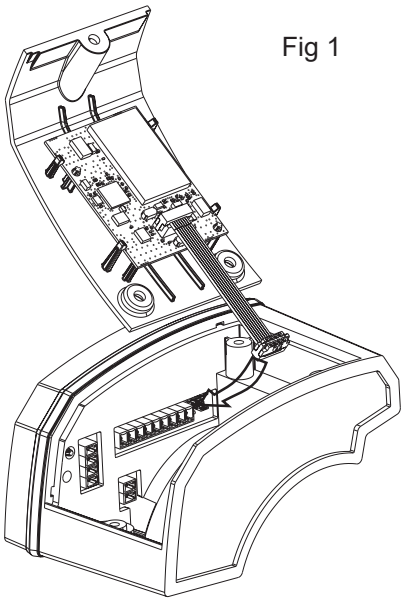

Fig 2

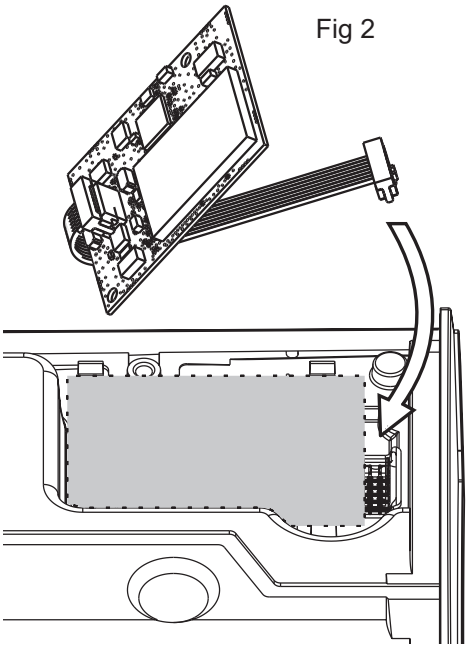

Wireless module

The wireless module is an optional module, for ecocirc XLplus only. The module is suitable for generating a wireless network and for activating the secondary RS485 channel (terminals 18-19-20).

The wireless connectivity allows the user to read and set pump parameters with devices such as laptop, tablets and smartphones, in an area of few meters from the circulator. When the wireless module is connected into ecocirc XLplus, and correctly configured, it generates a protected wireless network, accessible using the serial number and password printed on the label sticked on the side of the circulator's drive.

Second RS485 port availability can be required by external Building Management Systems when the first port (terminals 15-16-17) are used for internal communications in dual pumps or twin pumps configurations.

The wireless module can be used for the following functions:

- monitor operating parameters;
- monitor allarm and error indicators;
- setting the control mode;
- setting the set point;
- setting the temperature-based control mode;
- setting the dual pump operations.

RS-485 module

The RS485 module is an optional module, for ecocirc XLplus pumps only. The module is suitable for activating the secondary RS485 channel (terminals 18-19-20).

Second RS485 port availability can be required by external Building Management Systems when the first port (terminals 15-16-17) are used for internal communications in dual pumps or twin pumps configurations.

ecocirc XL
KIT SECOND RELAY

PART NUMBER	DESCRIPTION
109400480	KIT SECOND RELAY ecocirc XL 200-1700 watt

En-Rev_C

The Second Relay is a digital output suitable to provide information about the presence or absence of power supply on the circulator and it shows if the circulator is running or not remotely.

The Second Relay (Fig. 3) is an optional module, for the ecocirc XL and ecocirc XLplus range.
The module can't be used for the 25-40, 25-60, 32-40 and 32-60 models.

Kit content:
- N. 1 Relay module with cable
- N. 1 Module of connector
- N. 1 Instruction manual.

Fig 3

ecocirc XLplus
KIT CABLE USB / RS-485

PART NUMBER	DESCRIPTION
109395680	Kit cable USB/RS-485

En-Rev_A

The cable USB / RS-485 (Fig. 4) is an optional kit, for ecocirc XLplus only, suitable to connect the circulator to an external laptop to manage the Xylem Circulator Control Center to read and set up pump parameters by remote.
It is composed by the cable to connect the circulator to the laptop and an USB flash drive with Xylem Circulators Control Center software.

Xylem Circulator Control Center can be used for the following functions:
• monitor operating parameters;
• monitor alarm and error indicators;
• setting the control mode;
• setting the set point;
• setting the temperature-based control mode;
• setting the dual pump operations.

Kit content:
- N. 1 USB-RS485 cable with 3 female pin connector
- N. 1 Cable adapter with 3 male pin connector
- N. 1 USB Flash drive
- N. 2 Instruction manuals.

Fig 4

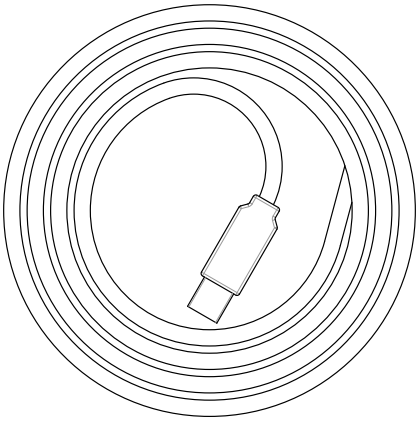

FURTHER PRODUCT SELECTION AND DOCUMENTATION

Xylect™

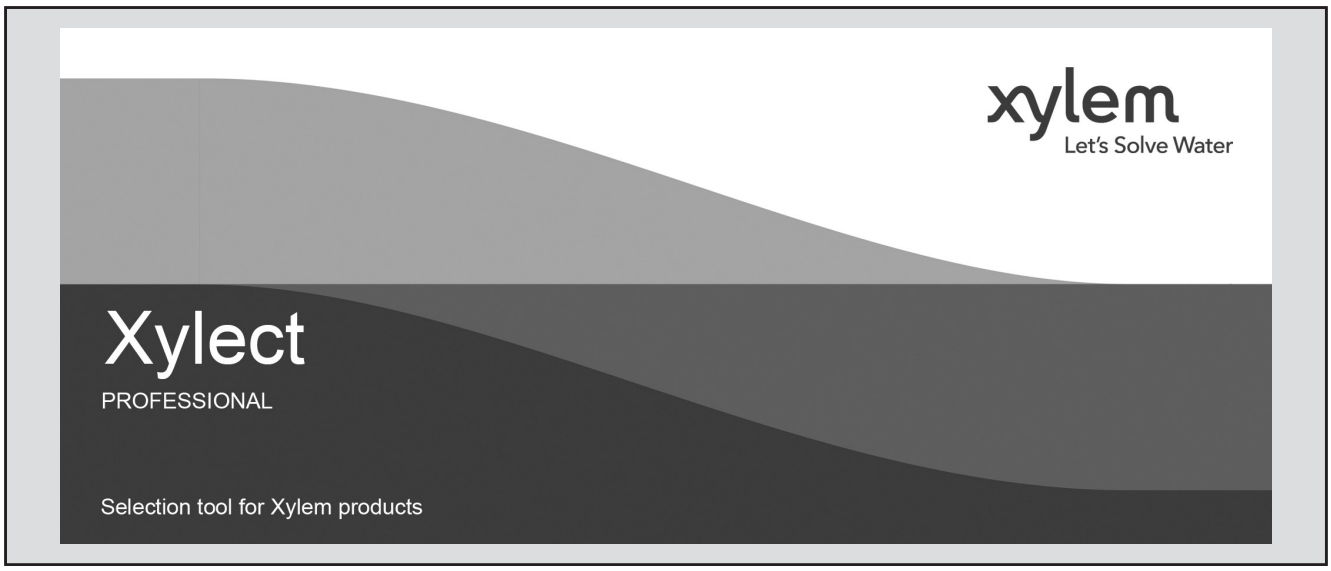

Xylect™ is pump solution selection software with an extensive online database of product information across the entire Lowara range of pumps and related products, with multiple search options and helpful project management facilities. The system holds up-to-date product information on thousands of products and accessories.

The possibility to search by applications and the detailed information output given makes it easy to make the optimal selection without having detailed knowledge about the Lowara products.

The search can be made by:

- Application
- Product type
- Duty point

Xylect™ gives a detailed output:

- List with search results
- Performance curves (flow, head, power, efficiency, NPSH)
- Motor data
- Dimensional drawings
- Options
- Data sheet printouts
- Document downloads incl dxf files

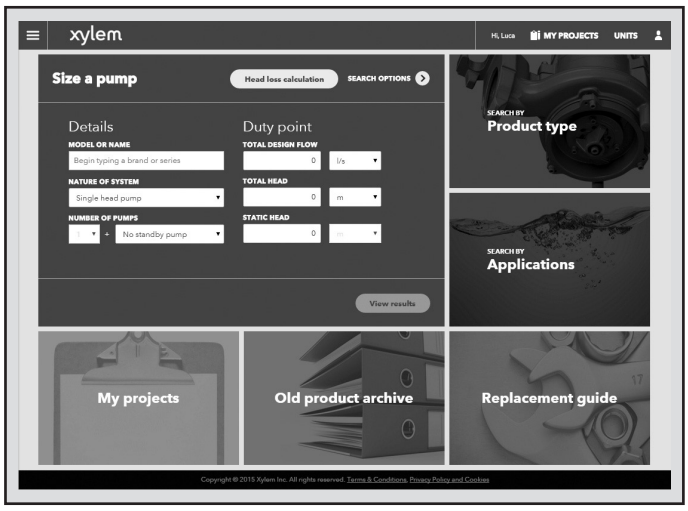

The search by application guides users not familiar with the product range to the right choice.

FURTHER PRODUCT SELECTION AND DOCUMENTATION

Xylect™

The detailed output makes it easy to select the optimal pump from the given alternatives.

The best way to work with Xylect™ is to create a personal account. This makes it possible to:

- Set own standard units
- Create and save projects
- Share projects with other Xylect™ users

Every registered user has a proper space, where all projects are saved.

For more information about Xylect™ please contact our sales network or visit www.xylect.com.

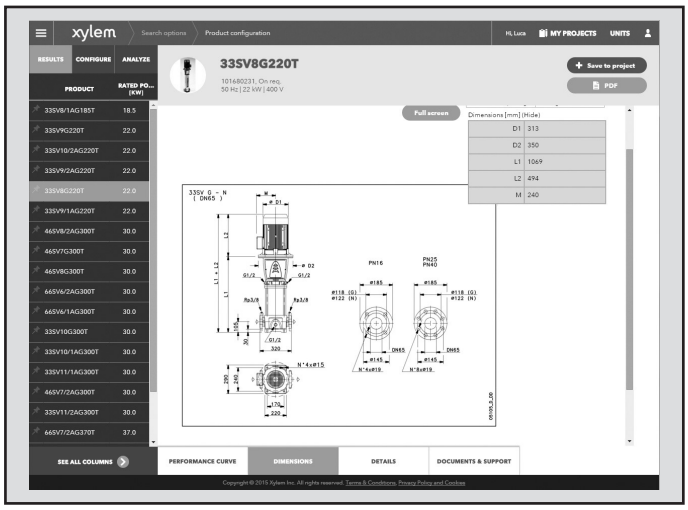

Dimensional drawings appear on the screen and can be downloaded in dxf format.

Xylem |'zīləm|

1) The tissue in plants that brings water upward from the roots;
2) a leading global water technology company.

We're a global team unified in a common purpose: creating advanced technology solutions to the world's water challenges. Developing new technologies that will improve the way water is used, conserved, and re-used in the future is central to our work. Our products and services move, treat, analyze, monitor and return water to the environment, in public utility, industrial, residential and commercial building services settings.
Xylem also provides a leading portfolio of smart metering, network technologies and advanced analytics solutions for water, electric and gas utilities. In more than 150 countries, we have strong, long-standing relationships with customers who know us for our powerful combination of leading product brands and applications expertise with a strong focus on developing comprehensive, sustainable solutions.

For more information on how Xylem can help you, go to www.xylem.com.

LOWARA®

xylem
Let's Solve Water

For information and technical support
Xylem Service Italia Srl

Via Dottor Vittorio Lombardi 14
36075 - Montecchio Maggiore (VI) - Italy
Tel. (+39) 0444 707111
Fax (+39) 0444 491043
www.lowara.com

Xylem Service Italia Srl reserves the right to make modification without prior notice.
Lowara, Xylem are trademarks of Xylem Inc. or one of its subsidiaries
© 2018 Xylem, Inc.